You have downloaded a manual for our Model Porta-Fab 45 Ironworker. This manual does not include all of the optional tooling for this machine. If you would like a tooling manual, please download the #20 Tooling Manual.

Scotchman
Metal Fabricating Solutions

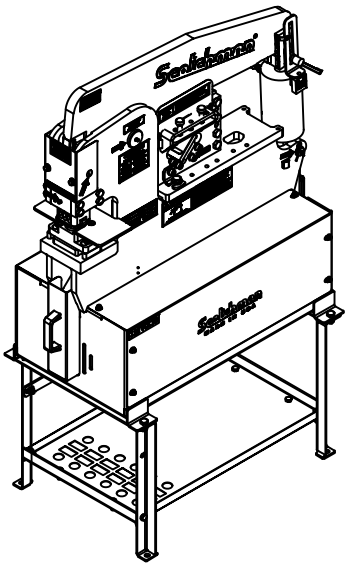

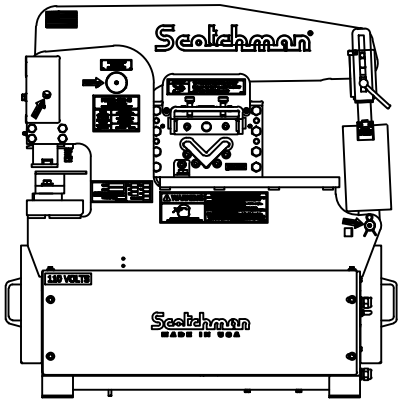

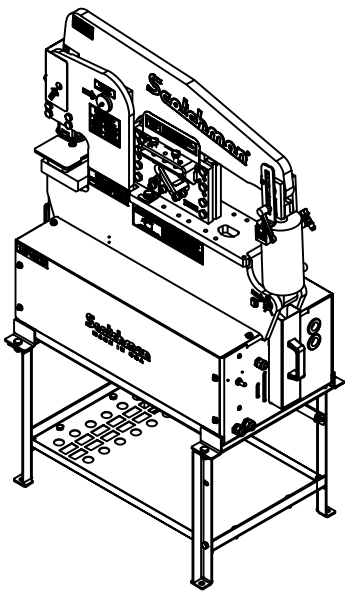

MADE IN THE USA

Scotchman®

Metal Fabricating Solutions

www.scotchman.com

MODEL

PORTA-FAB

45 TON

IRONWORKER

JANUARY 2022

SCOTCHMAN INDS. - 180 E US HWY 14 - PO BOX 850 - PHILIP, SD 57567 Call: 1-800-843-8844

TABLE OF CONTENTS

SECTION		DESCRIPTION	PAGE #
1.0		INTRODUCTION	3
2.0		SAFETY PRECAUTIONS	4-5
	2.1	Warranty	5
3.0		WARNING LABELS	6-7
4.0		INSTALLATION & SET UP	8-11
	4.1	Physical Dimensions	8
	4.2	Machine Moving Procedures	10
	4.3	Physical Inspection	10
	4.4	Electrical Requirements	12
	4.5	Machine Start-up	12
5.0		MAINTENANCE	13-15
	5.1	Lubrication	13
	5.2	Scheduled Maintenance	14
6.0		MACHINE OPERATION	16-25
	6.1	Punch Operation	16
	6.2	Three in One Shear	22
7.0		OPTIONAL TOOLING	26-49
	7.1	Rod Shear	27
	7.2	Six Inch Brake	28
	7.3	Eight & Twelve Inch Brakes	30
	7.4	Pipe Notcher	34
	7.5	Rectangle Notcher	38
	7.6	Picket Tool	40
	7.7	6 x 6 Ninety Degree Notcher	42
	7.8	Square Tube Shear	44
	7.9	Optional Die Holders & Strippers	44
	7.10	Multi-Shear Tool	46
	7.11	Weld Coupon Bender Tool	48
	7.12	Open End Brake	50

TABLE OF CONTENTS

SECTION		DESCRIPTION	PAGE #
8.0		TROUBLE SHOOTING GUIDE	51-53
	8.1	Electrical - Motor	51
	8.2	Hydraulic	51
	8.3	Cylinder Seal Replacement	52
9.0		MACHINE PARTS LISTS	54-67
	9.1	Punch Assembly	54
	9.2	Optional Stand Assembly	56
	9.3	Base Assembly	58
	9.4	Power Unit	60
	9.5	3 in 1 Combination Tool	62
	9.6	Optional 30" Stop Assembly	64
	9.7	Stroke Control	66
10.0		WIRING DIAGRAM	68
11.0		HYDRAULIC SCHEMATIC	75

1.0 INTRODUCTION

The SCOTCHMAN IRONWORKER is a versatile, multi-purpose, shearing, punching and forming machine engineered for trouble free operation. The design of the machine combines simplicity of operation with smooth, full stroke control.

The ability of the operator to control the machine's direction of movement at any point in the stroke, (i.e. stop, jog or reverse) gives the SCOTCHMAN IRONWORKER a tremendous advantage over mechanical ironworkers.

There is no chance of the SCOTCHMAN IRONWORKER being accidentally tripped.

The hydraulic system operates at a maximum pressure of 2,500 PSI (172 BAR) and is protected from overload by a built-in relief valve.

2.0 SAFETY PRECAUTIONS

1. **The operators of this machine must be qualified and well trained in the operation of the machine. The operators must be aware of the capacities of the machine and the proper use of the hold-down devices, strippers and guards provided with the machine.**

2. **All of the guards, adjustable restrictors and awareness barriers must be installed on the machine and kept in good working order. Promptly replace worn or damaged parts with authorized parts.**

3. **Never place any part of your body into or under any of the machine's moving parts, strippers or hold devices.**

4. **Wear the appropriate personal protective equipment. Safety glasses are required at all times, whether operating, setting up or observing this machine in operation. Since heavy pieces of metal with sharp edges can be processed on this machine, the operators should also wear steel-toed shoes and tight fitting leather gloves.**

5. **Strictly comply with all warning labels and decals on the machine. Never remove any of the labels and replace worn or damaged labels promptly.**

6. **Always disconnect and lock out the power when performing maintenance work or setting up any tooling on the machine. Follow the procedures outlined in the operator's manual for setting up, changing or aligning any tooling on this machine.**

7. **Never operate this machine with dull or damaged tooling. Replace worn punches, dies and blades promptly.**

8. **Practice good housekeeping. Keep the area around the machine clean and well lit. Do not obstruct the operator's position by placing anything around the machine that impedes the operator's access to the machine.**

9. **Never modify this machine in any way without the written permission of the manufacturer.**

10. **Never leave this machine running unattended.**

11. **Set up a program of routine inspections and maintenance for this machine. Make all repairs and adjustments in accordance with the manufacturer's instructions.**

12. **A safety dvd was mailed to you or shipped with this machine. If you did not receive it, please contact the factory or your local dealer immediately and one will be sent to you at no charge. If the machine was purchased used, please contact the factory for a safety tape.**

2.1 WARRANTY

SCOTCHMAN INDUSTRIES, INC. will, within three years of the date of purchase, replace F.O.B. the factory or refund the purchase price for any goods which are defective in materials or workmanship, provided the buyer returns the warranty registration card within thirty (30) days of the purchase date and, at the seller's option, returns the defective goods freight and delivery prepaid to the seller, which shall be the seller's sole and exclusive remedy for defective goods.

Hydraulic and electric components are subject to their respective manufacturer's warranties.

This warranty does not apply to machines and/or components which have been altered, changed or modified in any way or subjected to abuse and abnormal use, inadequate maintenance and lubrication or subjected to use beyond the seller's recommended capacities and specifications.

In no event shall the seller be liable for labor cost expended on such goods or consequential damages.

The seller shall not be liable to purchaser or any other person for loss or damage directly or indirectly arising from the use of the goods or from any other cause.

No officer, employee or agent of the seller is authorized to make any oral representations or warranty of fitness or to waive any of the foregoing terms of sale and none shall be binding on the seller.

Any electrical changes made to the standard machine due to local electrical code variation must be paid by purchaser.

As we constantly strive to improve our products, we reserve the right to make changes without notification.

3.0 WARNING LABELS

SECTION 3.0 WARNING LABELS			
ITEM	QTY	PART #	DESCRIPTION
A	1	003190	20K PUNCH STICKER
B	1	003110	PUNCH & DIE WARNING
C	5	019105	DECAL "GREASE POINT"
D	1	012372	PORTA-FAB CAPACITY DECAL
E	1	019127	US FLAG DECAL
F	1	019103	DECAL "LUBRICATE"
G	1	010115	15" SCOTCHMAN DECAL
H	1	019300	RIGHT HAND RULE 12"
I	1	003100	LARGE SAFETY GLASSES
J	1	019100	U.S. DATA PLATE
K	1	093001	110V STICKER
K1	1	019120	230V 1PH STICKER
L	1	003105	FINGERS BEYOND BAR GUARD
M	1	016328	ANGLE SHEAR FRONT DECAL
N	1	003175	CAUTION CONTAMINATION (not shown)
O	1	019102	DECAL"RESERVOIR CAPACITY" (not shown)
P		003565	45 DECAL PACKAGE

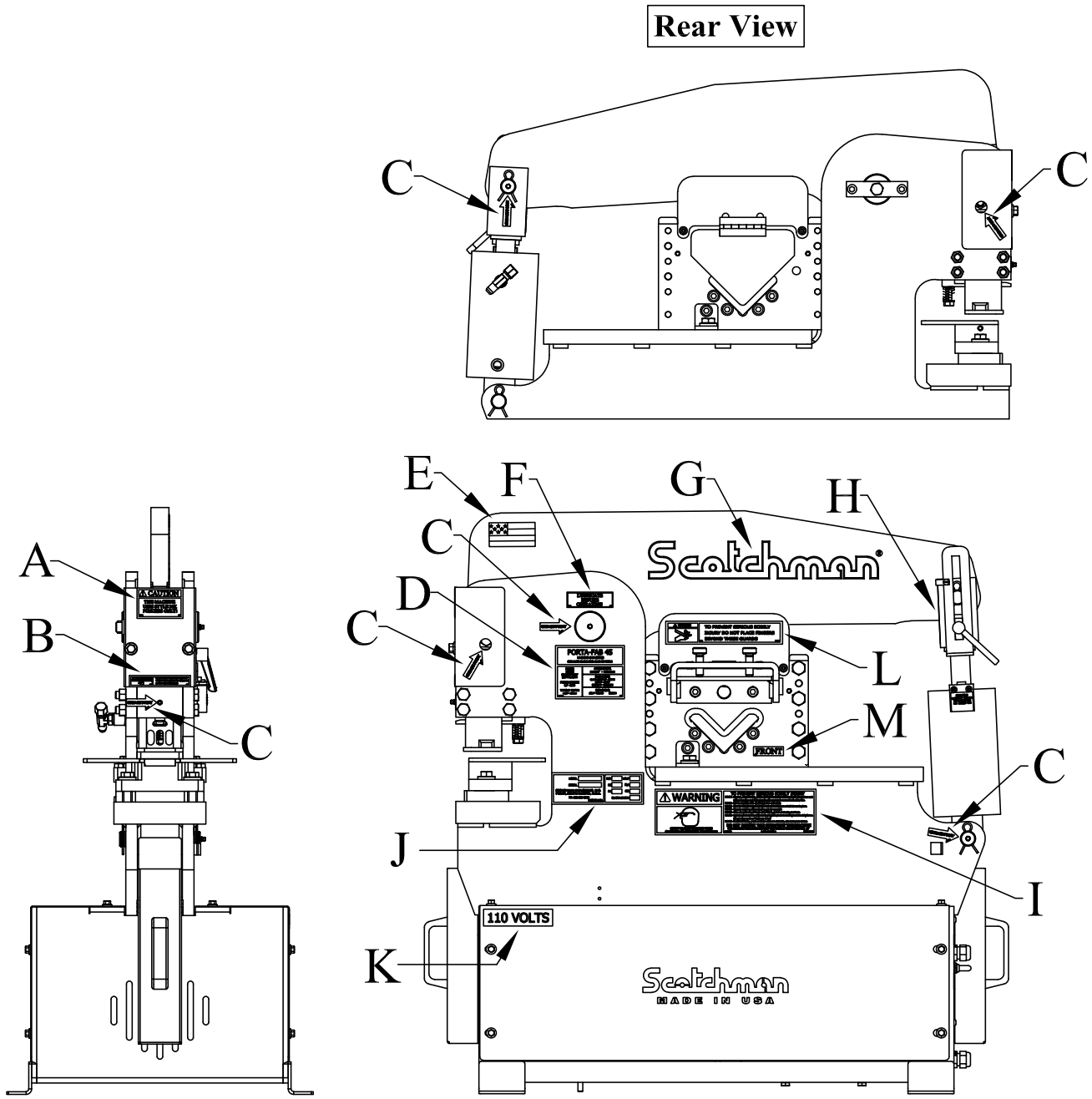
Rear View
C
C
A
B
C
E
F
G
H
C
D
C
L
M
C
J
I
K
Scotchman
110 VOLTS
WARNING
FRONT
Scotchman
MADE IN USA

FIGURE 1

4.0 INSTALLATION AND SET-UP

CAUTION: THIS SECTION DISCUSSES INSTALLATION AND SET-UP PROCEDURES. PLEASE READ ALL SECTIONS OF THIS MANUAL THOROUGHLY BEFORE OPERATING THIS MACHINE.

4.1 PHYSICAL DIMENSIONS

		WITHOUT STAND		WITH STAND	
		INCHES	CM	INCHES	CM
A	Floor To The Top Of Die Holder	22.04	55.98	39.54	100.43
B	Floor To Punch Bolster	19.20	48.77	36.70	93.22
C	Throat Depth	4.25	10.80	4.25	10.80
D	Floor To Tool Table	21.45	54.48	38.95	98.93
E	Punch Stroke	1.06	2.70	1.06	2.70
F	Height	38.13	96.85	55.63	141.30
G	Length	38.12	96.82	38.12	96.82
H	Width	20	50.80	20	50.80
I	Weight	605 LBS.	275 KG	635 LBS.	288 KG

WITHOUT STAND

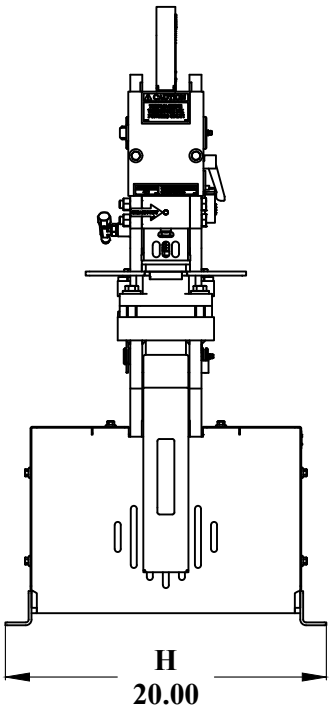

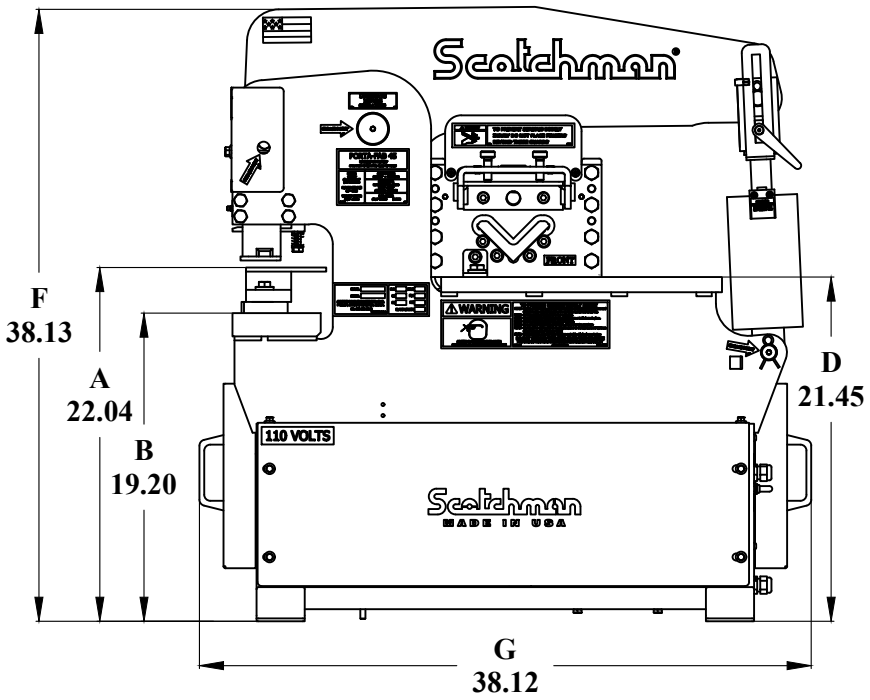

WITH STAND

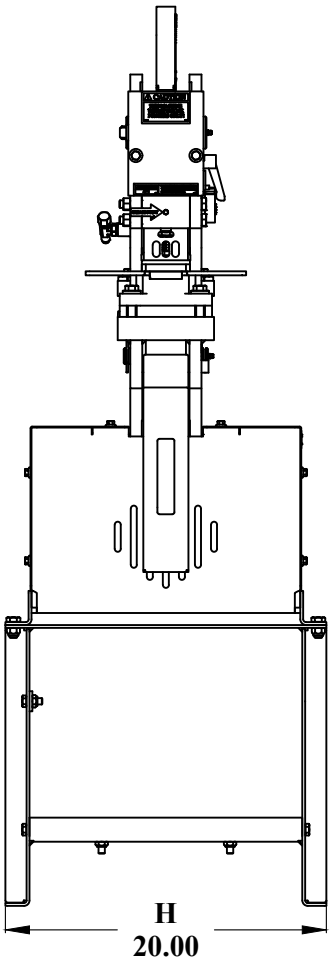

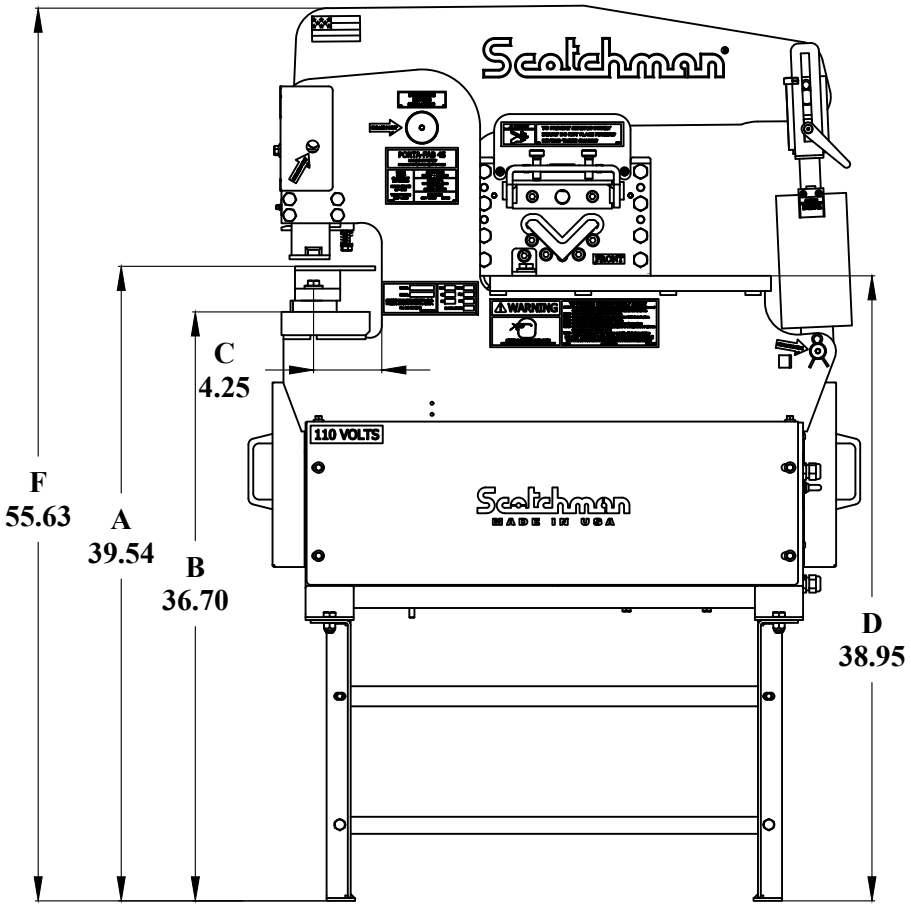

FIGURE 2

4.2 MACHINE MOVING PROCEDURES

⌦ **CAUTION: BE SURE THAT ANY LIFTING DEVICE HAS ADEQUATE CAPACITY BEFORE ATTEMPTING TO MOVE THIS MACHINE.**

The weight of this machine is 605 pounds (274.42 kg) without the optional stand and 635 pounds (288.03 kg) with the stand. FIGURE 3 ON THE FOLLOWING PAGE DEMONSTRATES THE USE OF AN OVERHEAD LIFT OR A FORK LIFT. These are the only two recommended methods of moving this machine. The machine should be moved by the use of an overhead lift if it is not equipped with the optional stand and with a forklift if it is equipped with the stand. When using a fork lift, spread the forks of the lift as wide as possible, for stability. Lift only on the base of the machine. Do not lift the machine by placing the forks under the base of the optional stand.

4.3 PHYSICAL INSPECTION

Any damage to the machine during shipment should be reported to the delivery carrier immediately and a damage report made out so that a claim can be placed. The carrier is responsible for shipping damage, but it is the customer's responsibility to report damages, external or internal, immediately. After the machine has been positioned, the shroud on the operator's side should be removed and an inspection made of the interior for missing or damaged parts.

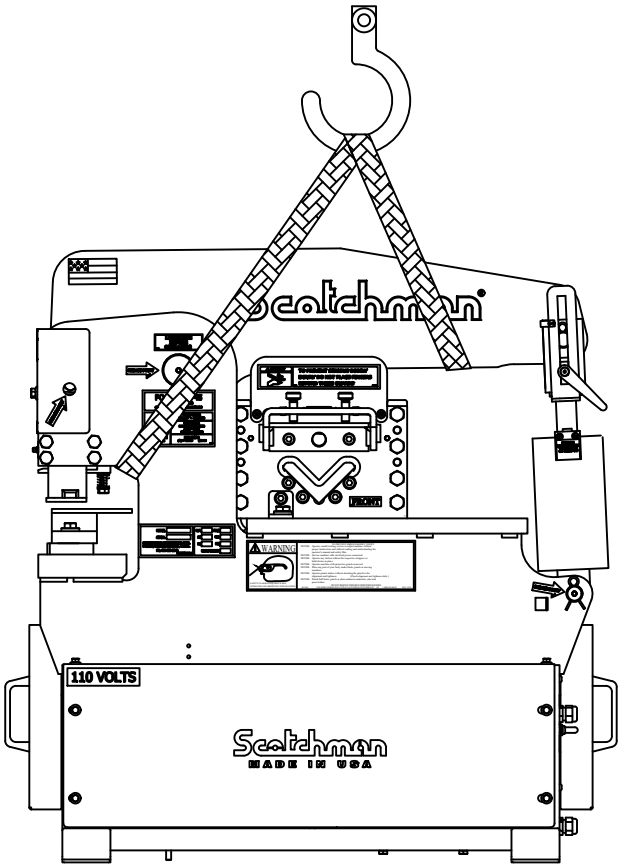

WITHOUT OPTIONAL STAND

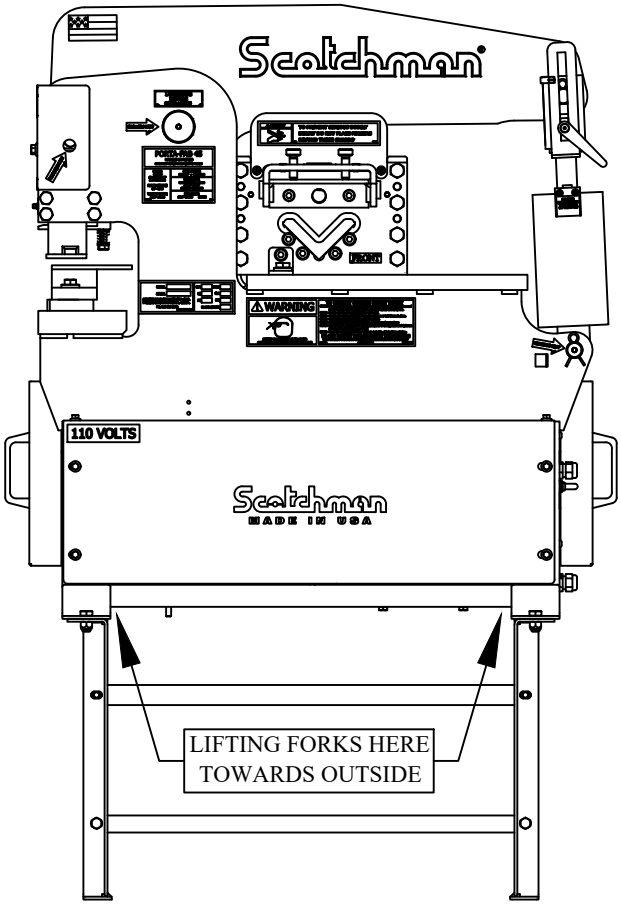

WITH OPTIONAL STAND

FIGURE 3

4.4 ELECTRICAL REQUIREMENTS

⌦ **CAUTION: TO PREVENT DAMAGE TO THE MOTOR AND DANGER TO THE OPERATOR, ALL ELECTRICAL CONNECTIONS SHOULD BE MADE BY A LICENSED ELECTRICIAN.**

A 10 foot (3 meter) cord is provided with this machine. The plug you install on the cord must have a minimum rating of 30 amps. We do not recommend using extension cords with this machine. If there is a case where an extension cord must be used, it must be of adequate gauge and rating to support the amp draw of this motor. Failure to adequately size an extension cord for this machine may result in damage to the machine. Any extension cord used with this machine must be at least 10 gauge and have ends rated for 30 amps. Check the motor data tag for full load current requirements.

MOTOR VOLTAGE	FULL LOAD CURRENT
1PH 110/115V	22.5/19 AMPS
1PH 220/230V	11.5/9.5 Amps
RPM: 1425/1725	FRAME: 56C
POWER RATING: 2HP	HZ: 60/50

4.5 MACHINE START-UP

Before starting this machine, take time to thoroughly review the safety dvd and the operator's manual. We strongly urge you to follow the OSHA directive CFR-1910.147 (effective 09-01-90) regarding lock-out, tag-out procedures.

Before powering the machine, be sure that all packing materials and tools have been removed from the machine and that all work stations are clear.

5.0 MAINTENANCE

The Scotchman Ironworker is an exceptionally rugged machine designed for long life with a minimum amount of maintenance. A regular program of servicing will extend the machine's life and prevent costly downtime.

5.1 LUBRICATION

- **IMPORTANT: Before operating the Porta-Fab Ironworker, apply oil to the THREE IN ONE TOOL blades and the punch and die. Re-oil the punches and dies every 5 to 10 holes and the blades every 10 to 15 cuts. The oil will allow the machine to shear, punch and strip easier and increase tool life considerably. We recommend cutting oil or motor oil swabbed on with a small brush or applied with a squirt can or spray applicator. Grease the main pivot pin and the punch barrel and guide daily.**

A multi-purpose, Molybdenum Disulfide (Dow Corning BR-2 or equivalent), high pressure, bearing grease is recommended. Check the oil level in the reservoir once a month. To check the oil level, remove the filler cap and measure the depth of the oil in the reservoir. The fluid should be 1/2 of an inch below the top of the reservoir. Use a lightweight, non-foaming, hydraulic oil such as Mobil DTE 16, Shell Pellus 46, Texaco Rando 46 or equivalent.

5.2 SCHEDULED MAINTENANCE

A program of scheduled maintenance should be set up and documented according to your application and the frequency you use this machine. The following is a list of important items that should be included in a scheduled maintenance program:

1. EVERY 250 HOURS OR THREE MONTHS:

A. Check the clearance between the punch barrel (A) and the punch barrel guide (B). FOR PARTS IDENTIFICATION, SEE FIGURE 4 ON THE FOLLOWING PAGE.

TO CHECK THE CLEARANCE:

1. With a punch and die properly installed following the instructions in SECTION 6.1, operate the machine until the punch enters the die.

2. With the punch in the die, jog the machine with the foot pedal, watching for lateral movement of the punch in the die.

3. If lateral movement is noted, turn the machine's power off. Remove the punch barrel (A) and punch barrel guide (B) from the machine and check the tolerance between the two parts.

4. If the tolerance exceeds three (.003) thousandths of an inch (.07mm), replace both parts.

5. When replacing these parts, do not over tighten the drag link bolts (C & E). The bolts should be tight enough to restrict the punch barrel from rotating, but not so tight that they won't allow the drag links (D) to rotate as the arm travels down.

2. EVERY 500 HOURS OR SIX MONTHS:

A. Check the condition of the blades and any component tools for wear. Replace worn parts promptly.

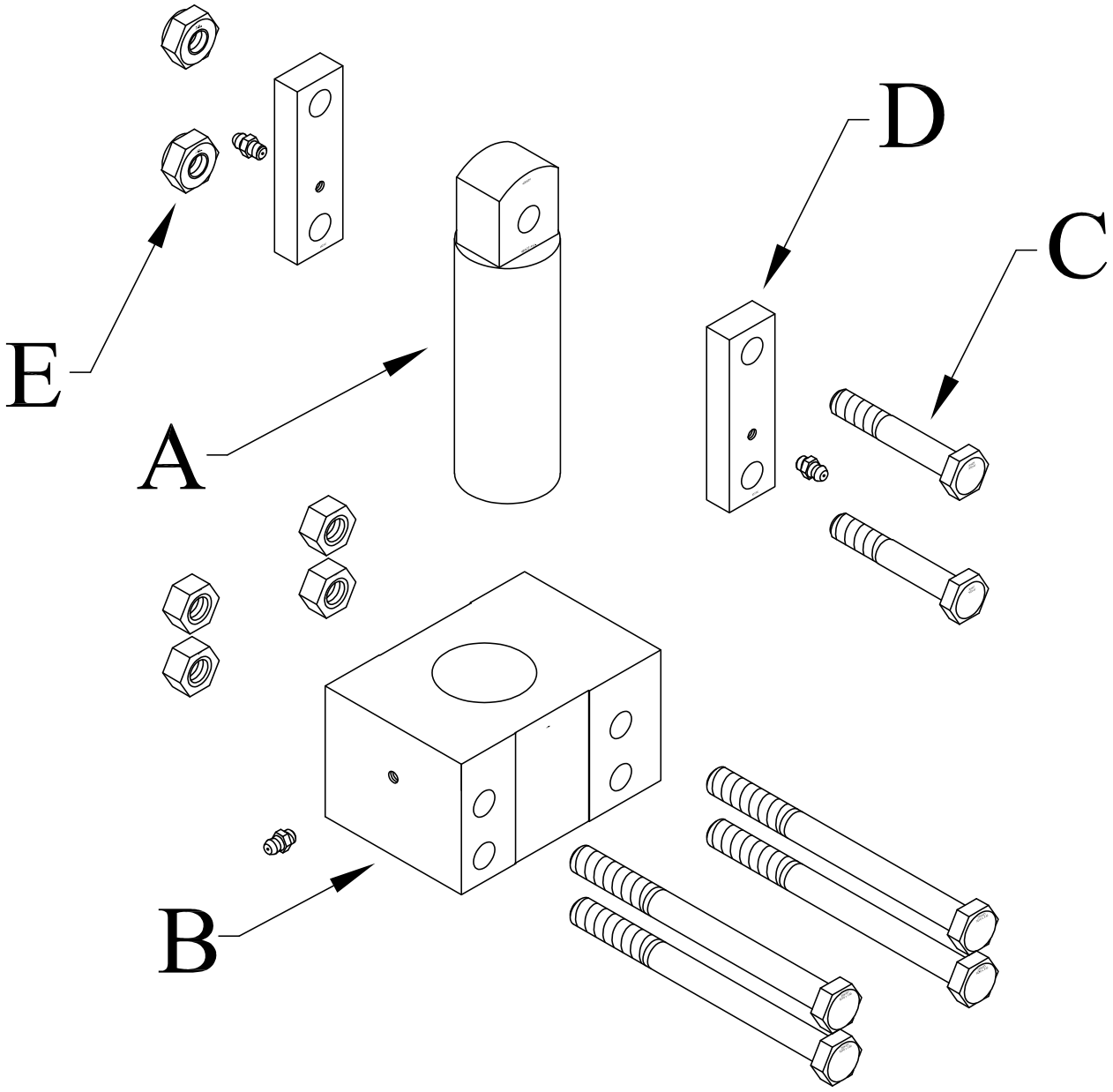

FIGURE 4

6.0 MACHINE OPERATION

6.1 PUNCH OPERATION

- **ALWAYS WEAR SAFETY GLASSES.**
- **THE FIRST AND MOST IMPORTANT PROCEDURE IS THE PROPER METHOD OF INSTALLING AND ALIGNING PUNCHES AND DIES.**
- **WARNING: FAILURE TO PROPERLY ALIGN PUNCHES AND DIES CAN CAUSE SERIOUS INJURY TO PERSONNEL AND/OR DAMAGE TO EQUIPMENT. PLEASE READ CAREFULLY AND UNDERSTAND THE FOLLOWING METHOD. IT WILL ALSO BE HELPFUL TO REFER TO THE SAFETY DVD PROVIDED FOR A VISUAL REFERENCE. IF YOU DID NOT RECEIVE A SAFETY DVD, PLEASE CONTACT YOUR DEALER OR THE FACTORY.**

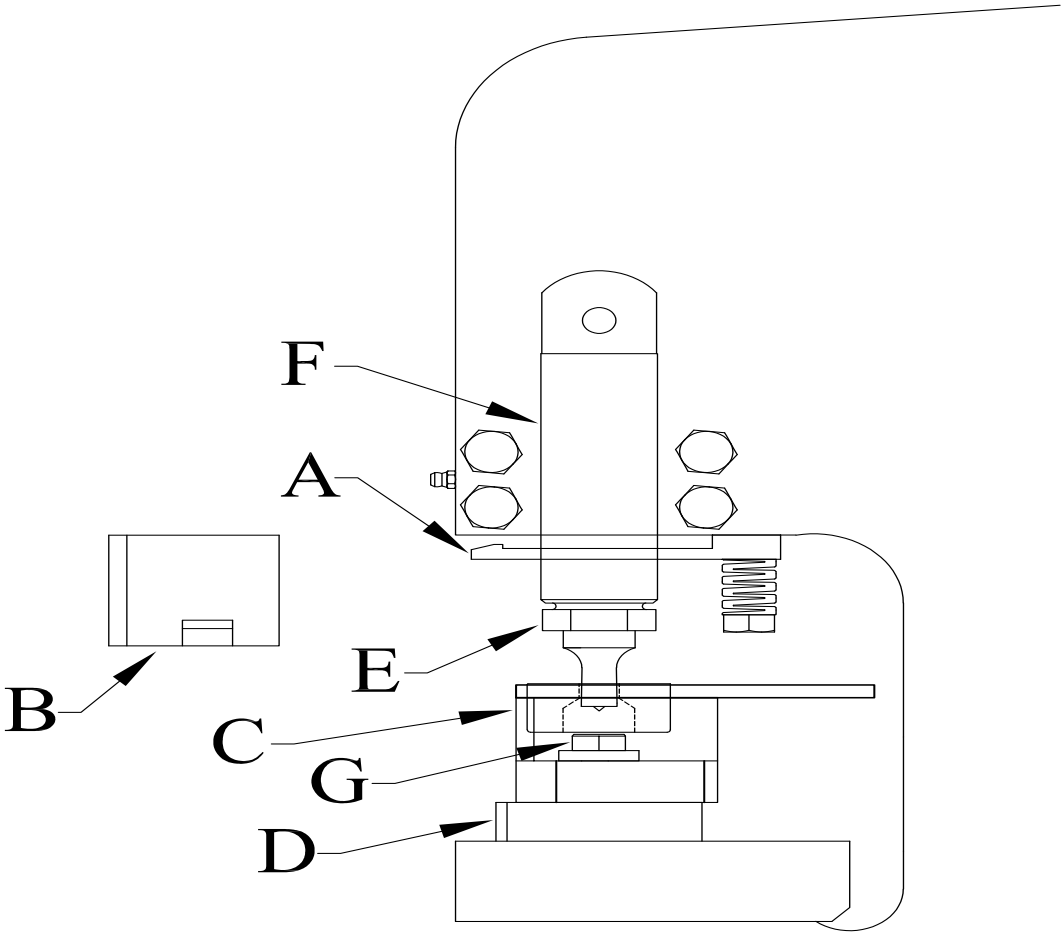

FIGURE 5

A. ALIGNMENT AND REMOVAL OF PUNCHES AND DIES.
REFER TO FIGURE 5 ON THE PRECEDING PAGE.

1. With the punch in the down position and the arm up, turn the machine's electrical power OFF.

2. Remove the stripper (B) by pressing down on the tab (A) and pulling the stripper toward you.

3. Loosen and remove the bolts (G) holding the die holder (C) and remove the die holder (C) and spacer (D).

4. Loosen the set screw holding the die. Remove the die and set it aside.

5. Loosen and remove the punch retaining nut (E) and set the punch retaining nut and punch aside.

6 . Select the proper punch and die. Make sure that there is proper clearance between the punch and die. FOR RECOMMENDED CLEARANCES, SEE PARAGRAPH F IN SECTION 6.1.

✉ **PLEASE NOTE: ALL OF OUR #20K PUNCHES, INCLUDING OVALS, SQUARES, HEXAGONS AND SPECIAL ORDER PUNCHES, ARE SUPPLIED WITH AN ALIGNMENT KEY-WAY MACHINED INTO THE PUNCH. THIS KEY-WAY MATES WITH A KEY BUILT INTO THE MACHINE'S PUNCH BARREL. ALL PUNCHES USED ON THIS MACHINE MUST BE THE #20K STYLE.**

7. Clean both the punch and the die.

8. Insert the proper punch in the punch retaining nut (E) and thread it into the punch barrel (F) and tighten it with a wrench. If you are using a shaped punch, rotate the punch by hand until it seats on the key, before tightening the nut.

9. Insert the proper die in the die holder with the flat side of the die aligned with the set screw. Tighten the set screw firmly with a hex key wrench.

10. Place the die holder on the bolster and raise it up so that the punch enters the die.

11. Insert the spacer plate (D) between the die holder (C) and the bolster.

12. Align the punch to the die so that there is equal clearance on all sides of the punch in the die.

13. Insert and tighten both the die holder bolts (G) firmly.

14. Check to be sure that the punch and die are still in alignment. Realign, if necessary.

15. Replace the stripper (B).

✉ NOTE: If punching holes larger than 1", remove the stripper plate or, it will be damaged.

16. Check to make sure that there are no objects (such as tools) on or under any of the moving parts of the machine.

17. Turn the machine on.

18. Lubricate the punch and die before using and every 5 to 10 holes, thereafter.

FOR LUBRICATION INSTRUCTIONS, SEE SECTION 5.1.

⌦ CAUTION: REMOVE THE PUNCH AND DIE WHEN IT IS NOT IN USE.

B. CHECK PUNCHING TOOLS FOR TIGHTNESS.

Periodically during the day, check the punch and die for alignment. To do this, run the punch down until it enters the die and turn the machine's power OFF. Tighten the set screw holding the die, the die holder bolts and the punch retaining nut. Check the alignment of the punch and die. Power the machine and jog the punch up and down several times, to be sure of proper alignment.

C. CONTACT BOTH SIDES OF THE STRIPPER.

Punch holes with sufficient material to contact both sides of the punch stripper. If the workpiece does not contact both sides of the stripper, the side thrust may break the punch and will deform the workpiece.

D. SPECIAL STRIPPERS MAY BE REQUIRED FOR CERTAIN JOBS.

The standard stripper has been designed to work for most applications. For other applications, such as stripping small channel, a special stripper may have to be fabricated. The important consideration is to keep material level while stripping. When punching thin strap iron, the material will tend to draw up into the stripper. To prevent this, a plate or large washer can be attached to the bottom of the stripper, to reduce the size of the opening. This type of stripper will also allow you to punch in the corners of material. There is an oversize stripper available for oversize punching applications.

E. PUNCHING ANGLE IRON.

This machine is designed to punch angle iron with the leg down. If the application requires punching closer to the web than the standard dies allow, special offset dies are available.

E. PUNCHING ANGLE IRON.

This machine is designed to punch angle iron with the leg down. If the application requires punching closer to the web than the standard dies allow, special offset dies are available.

FOR ADDITIONAL INFORMATION ON PUNCHES AND DIES, SEE THE TOOLING MANUAL.

► **CAUTION: PUNCHING ANGLE IRON WITH THE LEG UP WILL CAUSE DAMAGE TO THE PUNCH RETAINING NUT.**

F. PUNCHING CAPACITIES.

MAXIMUM PUNCH SIZES FOR MILD STEEL (65,000 PSI TENSILE)

MATERIAL THICKNESS			DIAMETER OF HOLE	
INCHES	MM		INCHES	MM
1/4	6	OPTIONAL DIE HOLDER	2-1/4	57
5/16	7.9	OPTIONAL DIE HOLDER	1-3/4	44
3/8	8	STANDARD DIE HOLDER	1-1/4	32
1/2	12	STANDARD DIE HOLDER	1-1/8	28

► **NOTE: 1/2 INCH IS THE MAXIMUM MATERIAL THICKNESS.**

SEE FIGURE 6 ON THE NEXT PAGE FOR CHART SHOWING TONNAGE REQUIREMENTS

TONS REQUIRED PER HOLE TO PUNCH MILD STEEL HAVING 65,000 PSI TENSILE STRENGTH

HOLE DIAMETER		1/8 .125	3/16 .1875	1/4 .250	5/16 .3125	3/8 .375	7/16 .4375	1/2 .500	9/16 .5625	5/8 .625	11/16 .6875	3/4 .750	13/16 .8125	7/8 .875	15/16 .9375	1 1.00
METAL GAUGE	THICKNESS INCHES	PRESSURE IN TONS														
28	.015	.2	.2	.3	.4	.4	.5	.6	.7	.7	.8	.9	1.0	1.1	1.2	1.3
26	.018	.2	.3	.4	.4	.5	.6	.7	.8	.9	1.0	1.1	1.1	1.2	1.3	1.4
24	.024	.2	.4	.5	.6	.7	.8	.9	1.1	1.2	1.3	1.4	1.5	1.6	1.8	1.9
22	.030	.3	.4	.6	.7	.9	1.0	1.2	1.3	1.5	1.6	1.8	1.9	2.1	2.2	2.4
20	.036	.4	.5	.7	.9	1.1	1.2	1.4	1.6	1.8	1.9	2.1	2.3	2.5	2.6	2.8
18	.048	.5	.7	.9	1.2	1.4	1.6	1.9	2.1	2.4	2.6	2.8	3.1	3.3	3.5	3.8
16	.060	.6	.9	1.2	1.5	1.8	2.1	2.3	2.6	2.9	3.2	3.5	3.8	4.1	4.4	4.7
14	.075	.7	1.1	1.5	1.8	2.2	2.6	2.9	3.3	3.7	4.0	4.4	4.8	5.1	5.5	5.9
12	.105	1.0	1.5	2.1	2.6	3.1	3.6	4.1	4.6	5.1	5.7	6.2	6.7	7.2	7.7	8.2
10	.135	1.3	2.0	2.6	3.3	4.0	4.6	5.3	5.9	6.6	7.3	7.9	8.6	9.2	9.9	10.6
5/32	.157	- - -	2.3	3.1	3.8	4.6	5.4	6.1	6.9	7.7	8.4	9.2	10.0	10.7	11.5	12.3
3/16	.188	- - -	2.8	3.7	4.6	5.5	6.4	7.4	8.3	9.2	10.1	11.0	12.0	12.9	13.8	14.8
1/4	.250	- - -	- - -	4.9	6.1	7.4	8.6	9.8	11.1	12.3	13.5	14.7	16.0	17.2	18.4	19.7
3/8	.375	- - -	- - -	- - -	- - -	11.1	12.8	14.8	16.5	18.5	20.2	22.1	23.8	25.8	27.5	29.5
1/2	.500	- - -	- - -	- - -	- - -	- - -	- - -	19.7	22.0	24.6	26.9	29.5	31.8	34.4	36.8	39.4
5/8	.625	- - -	- - -	- - -	- - -	- - -	- - -	- - -	- - -	30.8	33.7	36.9	39.9	43.0	46.0	49.2
3/4	.750	- - -	- - -	- - -	- - -	- - -	- - -	- - -	- - -	- - -	- - -	44.3	47.7	51.7	55.2	59.0
1	1.00	- - -	- - -	- - -	- - -	- - -	- - -	- - -	- - -	- - -	- - -	- - -	- - -	- - -	- - -	80.0

FIGURE 6

Your Scotchman Ironworker is designed to operate in mild steel. Within conservative limits, it can also operate in medium carbon annealed steels and some forms of abrasion resistant steels.

Conditions of high shock can be encountered when punching alloy steels and accordingly, the machine rating must be reduced.

► **NOTE: WHEN CONDITIONS OF HIGH SHOCK ARE ENCOUNTERED, SET THE DOWN STROKE OF THE MACHINE SO THAT THE PUNCH STOPS JUST ABOVE THE PLANE OF THE DIE. THIS WILL REDUCE THE SHOCK WHEN THE PUNCH BREAKS THROUGH THE MATERIAL.**

The Porta-Fab Ironworker uses # 20K punches and dies that have a built-in clearance of thirty two (.032) thousandths of an inch. Under normal punching conditions, a punch will use a corresponding die stamped the same size.

A 3/8 inch punch will use a die stamped 3/8 inch. All Scotchman #20K punches and dies are stamped withthe size. All dies have a larger hole in the bottom side for slug relief.
Make sure that the smaller side of the die mates to the punch before installing it in the machine.

When punching materials other than mild steel or in cases of high punch shock, we recommend increasing the CLEARANCE. In thin materials, the recommended clearance is 1/10 of the material thickness.

Due to working clearances in the machine, we do not recommend clearances of less than 1/64 of an inch.

G. DO NOT PUNCH MATERIAL THICKER THAN THE DIAMETER OF THE PUNCH.
This "RULE OF THUMB" can be extended, but the punch supplier or Scotchman should be consulted first; (i.e. do not punch material thicker than 1/4 inch with a 1/4 inch diameter punch). This rule of thumb applies to mild steel only and must be reduced when punching alloy steels.

⌦ **CAUTION: CONTACT YOUR LOCAL DEALER OR THE FACTORY BEFORE ATTEMPTING TO PUNCH ANY TYPE OF ALLOY STEEL.**

H. PUNCH FULL, COMPLETE HOLES.
The side thrust encountered in punching partial holes can force the punch over against the die and result in punch or die breakage. THIS MAY RESULT IN SERIOUS BODILY INJURY. Special nibbling punch and die sets are available for punching into the edge of material. For further information, contact your local dealer or Scotchman.

I. MAINTAIN SUFFICIENT MATERIAL BETWEEN THE PUNCHED HOLE AND THE EDGE OF THE WORKPIECE.

The edge of the punch should clear the edge of the workpiece by a distance equal to the thickness of the material. Any edge distance less than this will result in a deformed workpiece.

J. DO NOT WORK WITH DULL OR DAMAGED TOOLING.

⌦ **<u>CAUTION</u>: WORKING WITH DULL OR DAMAGED PUNCHES AND DIES WILL INCREASE THE TONNAGE REQUIRED TO PERFORM THE OPERATION. THIS MAY RESULT IN FAILURE OF THE TOOL AND POSSIBLE INJURY TO PERSONNEL. IT WILL ALSO RESULT IN A LESS THAN DESIRABLE WORKPIECE.**

SCOTCHMAN

BEST IN THE BUSINESS WARRANTY

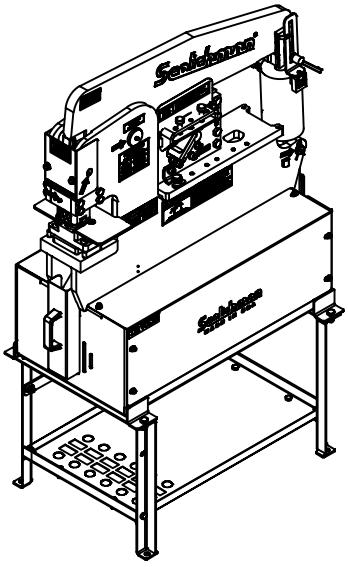

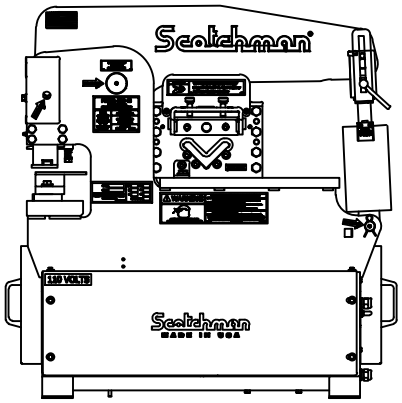

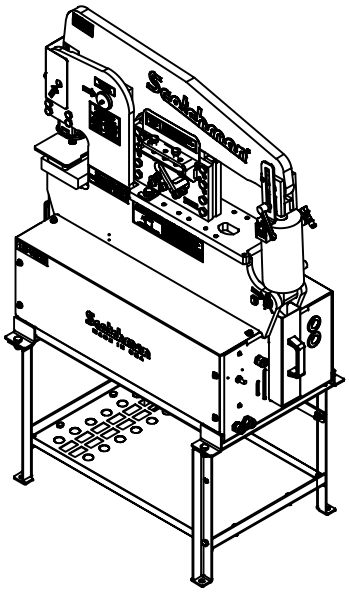

MADE IN THE USA

6.2 THREE IN ONE COMBINATION TOOL

The Three In One shear is a component tool designed to shear angle iron, round stock and plate. It installs on the tool table and has a maximum capacity of 3" x 3" x 5/16" inch (76x76x8mm) mild steel angle iron, 3/4" inch (19mm) round bar and 1/2" x 4" (12x102mm) or 3/8" x 6" (10x152mm) plate.

6.2A THREE IN ONE COMBINATION TOOL INSTALLATION

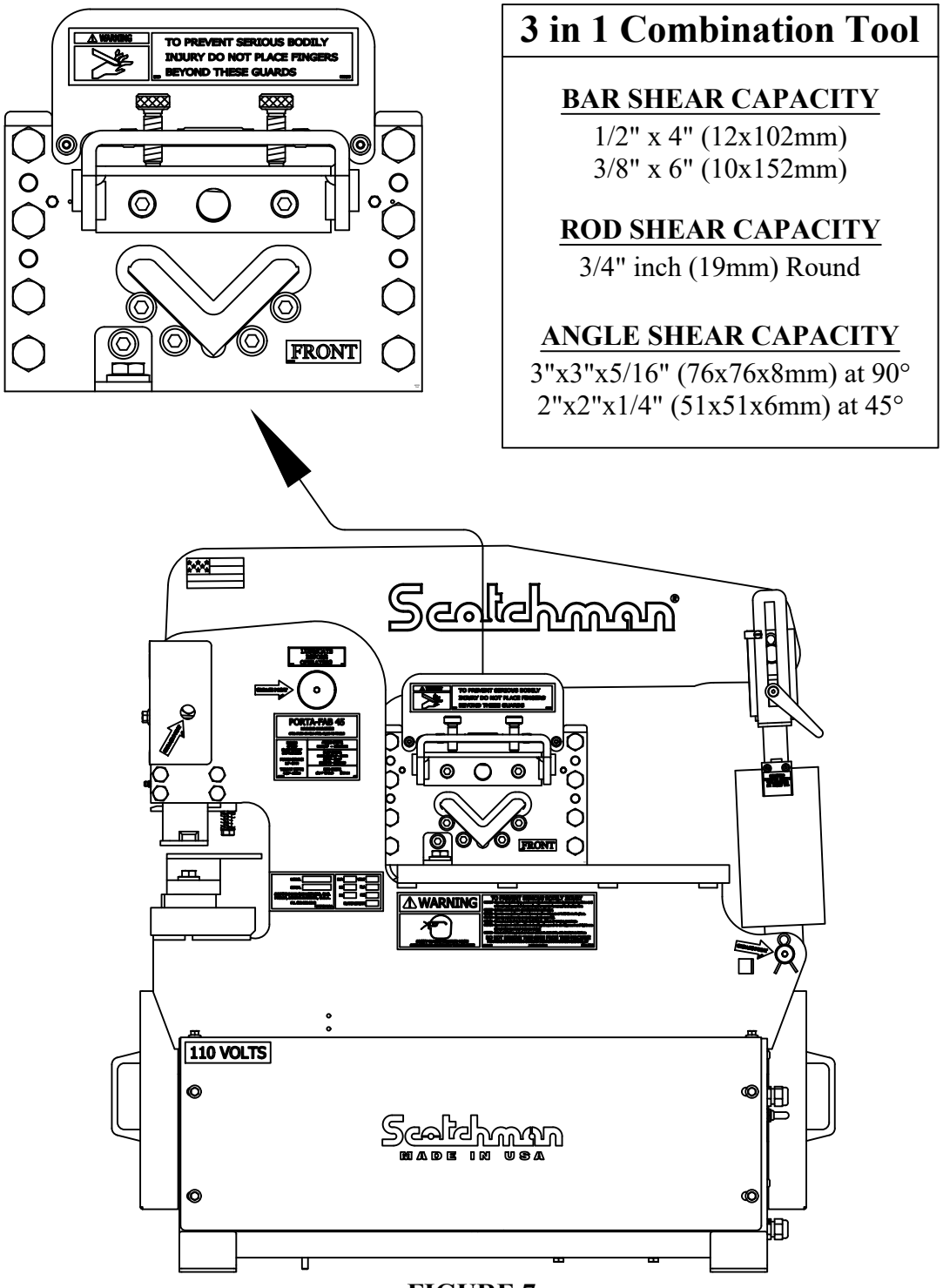

FIGURE 7

THE THREE IN ONE SHEAR MOUNTS ON THE TOOL TABLE AS SHOWN ON PREVIOUS PAGE.

1. **The arm must be in the up position.**

2. **Slide the tool under the arm with the Warning Label and the (2) thumb screws facing the operator's side of the machine.**

3. **The tool anchors to the tool table with the bolts provided. One is in the front of the tool and the other is on the back.**

4. **Make sure that the rounded cap on top of the tool is aligned squarely under the arm.**

5. **Grease the blade guides before using and twice daily when this tool is in use. There are (2) grease zerks on the front of the tool and (2) on the back of the tool.**

6.2B THREE IN ONE COMBINATION TOOL OPERATION

Apply oil to the upper and lower blades before the first cut is made and every 10 to 15 cuts, thereafter. Grease the slide block every two hours of operation. This reduces cutting tonnage and increases blade life.

USE THE FOLLOWING STEPS:

1. **Feed the workpiece through the tool, keeping it horizontal with the tool.**

2. **For the plate shear section of the tool, adjust the hold down screws to the size of material being sheared.**

3. **Depress the foot pedal and shear the material.**

IN ADDITION TO THESE BASIC STEPS, the operator should be familiar with the following:

A. MAINTAIN PROPER BLADE CLEARANCE.

Do not work with dull or damaged blades. If the blades are chipped or dull, they should be replaced. The movable blade for the multi tool is designed to fit only one way. Installing the blade backwards will cause damage to the tool. The blade must be installed so that the angle on the plate shear portion of the blade runs from smallest to largest, from left to right. SEE FIGURE 8 ON THE FOLLOWING PAGE.

B. MITER CUTTING.

The angle shear on this model is capable of mitering angle up to 2" x 2" x 1/4" inch (51 x 51 x 6mm) to forty five (45) degrees. To miter cut, raise the guard and feed the material into the shear until it contacts the lower blades, opposite the side it is being fed from.

NOTE: If tool ever jams or gets stuck - REMOVE THE TOOL FROM THE MACHINE BEFORE ATTEMPTING TO FREE IT.

► **CAUTION: IF THIS TOOL GETS STUCK AND REMOVED FROM MACHINE, DO NOT ATTEMPT TO FREE IT BY HAND!! USE A PRY BAR OR SIMILAR DEVICE. REPLACE THE BLADES OR INSTALL SHIMS, DEPENDING ON WHAT CAUSED THE JAM. ALWAYS REMOVE THE TOOL WHEN IT IS NOT IN USE.**

Moving Blade must be positioned in the tool as shown below or damage will result!!

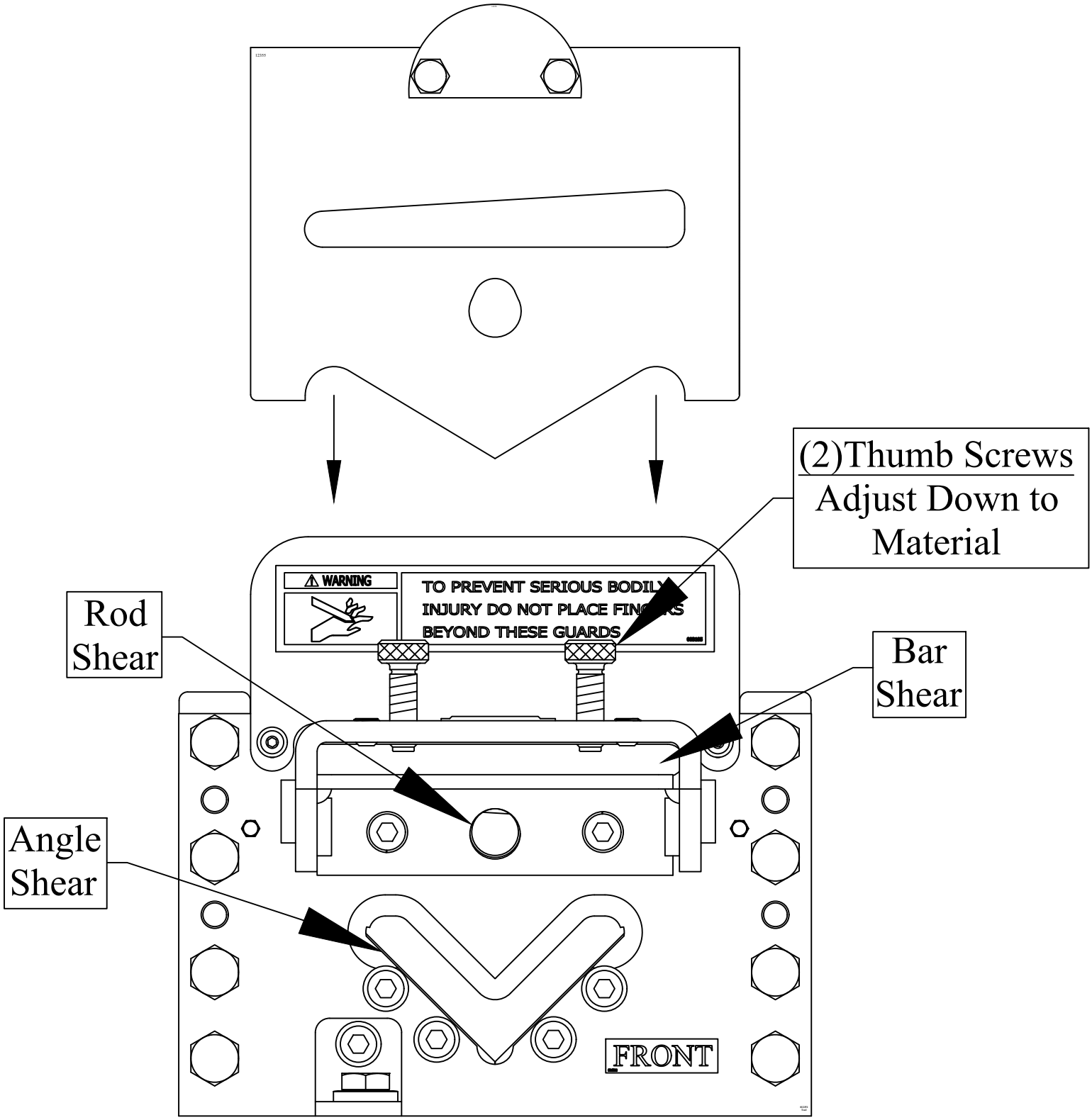

FIGURE 8

7.0 OPTIONAL TOOLS

⌦ **CAUTION: WHEN USING THE TOOL STATION REMOVE THE PUNCH AND DIE FROM THE PUNCH STATION.**

➲ **AS WITH ALL FUNCTIONS ON THIS MACHINE, SAFETY GLASSES ARE REQUIRED WHEN USING OPTIONAL TOOLS OF ANY TYPE.**

Each self contained tool has its own stroke and tonnage requirements.

This section will cover the installation, operation and maintenance of each tool.

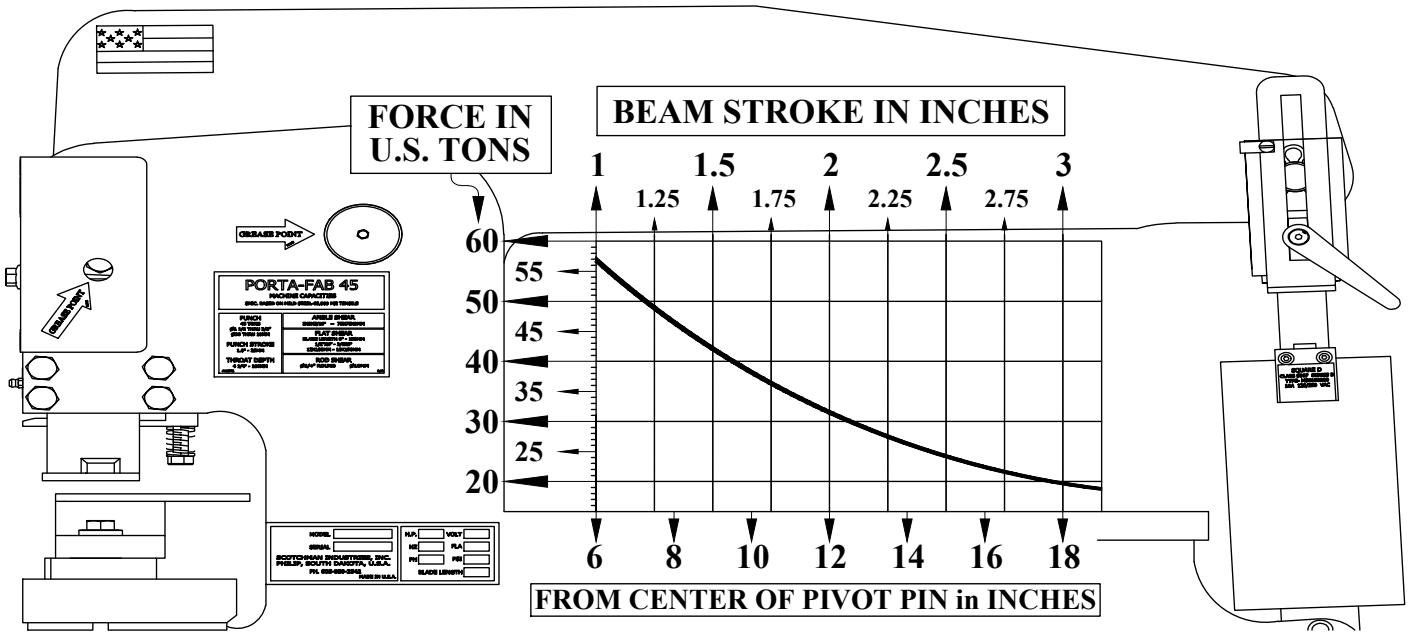

FIGURE 9

NOTE: If tool ever jams or gets stuck - REMOVE THE TOOL FROM THE MACHINE BEFORE ATTEMPTING TO FREE IT.

7.1 ROD SHEAR

The rod shear is a component tool designed to shear solid sections of round and square stock. It has a maximum capacity of 3/4 inch (19mm) in round or square.

7.1A ROD SHEAR INSTALLATION

SEE FIGURE 10 BELOW.

The rod shear mounts on the tool table in place of the Three in One shear and is anchored with the bolts provided. Mount the tool so that it is aligned squarely under the arm and lubricate the pressure cap on the top of the tool before installing it. Lubricate the top of the tool every two hours of operation. The rod shear requires a short stroke (approximately 1/2 inch, 12mm) and takes no slug.

7.1B ROD SHEAR OPERATION

Oil should be applied to both blades before the first cut and after every 10 to 15 cuts. On all round sizes, select the cavity closest to the size being sheared. In the square cavity, there is a kick up bolt adjustment. Adjust this bolt so that the workpiece will just feed under the bolt and remains horizontal to the tool.

► **CAUTION: ALWAYS REMOVE THE ROD SHEAR WHEN IT IS NOT IN USE.**

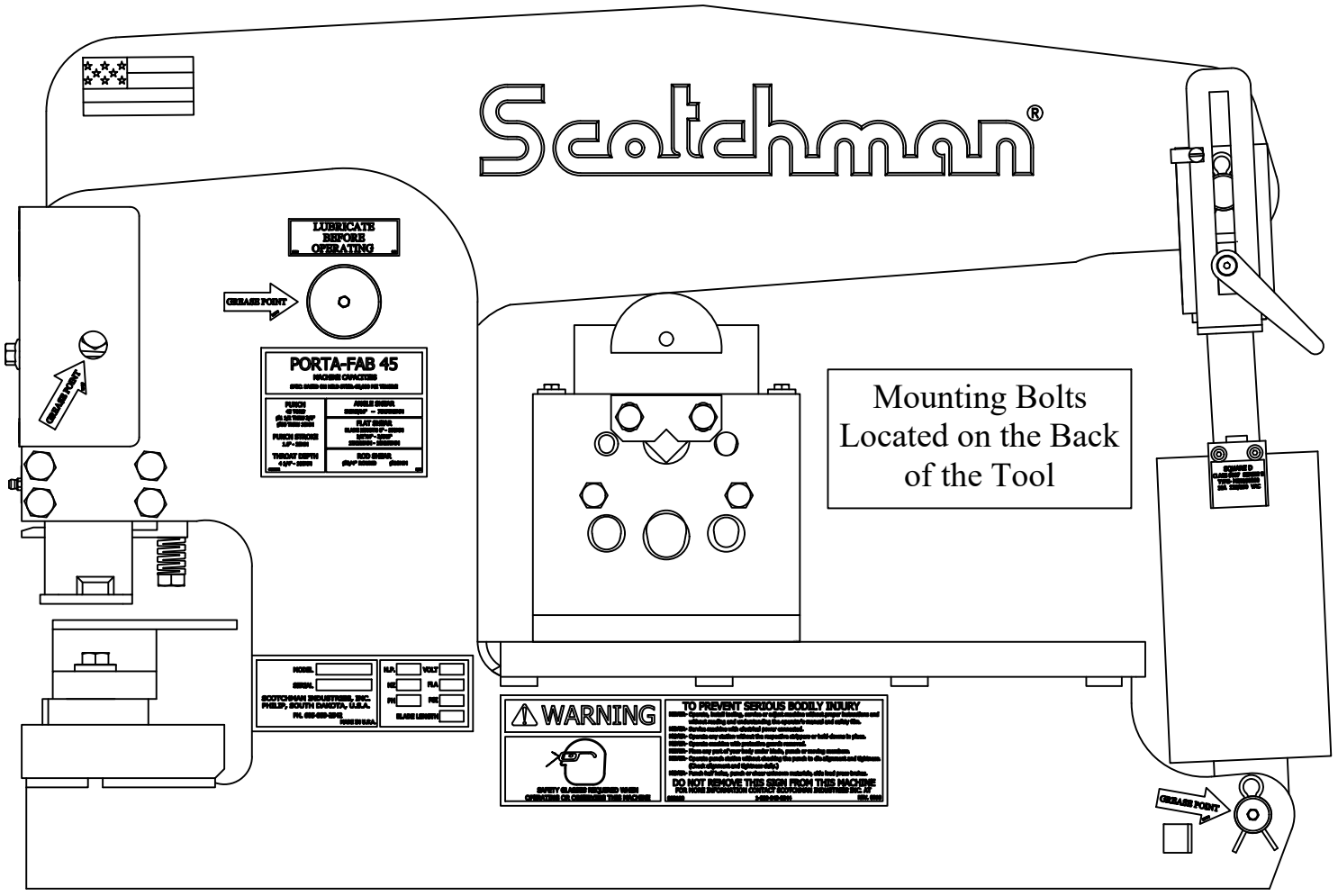

FIGURE 10

7.2 SIX INCH BRAKE

The six inch brake is a component tool designed to bend and form mild steel.

The six inch brake mounts in the punch station.

7.2A SIX INCH BRAKE INSTALLATION

SEE FIGURE 11 ON THE FOLLOWING PAGE.

1. **Remove the die holder, stripper and punch retaining nut.**

► **NOTE: THE STRIPPER MOUNTING PLATE (D) MUST BE REMOVED TO OPERATE THIS TOOL. FAILURE TO REMOVE THE STRIPPER MOUNTING PLATE WILL CAUSE DAMAGE TO THE BRAKE.**

2. **Install the upper brake die (A) in the punch barrel. Do not tighten the retaining nut at this time.**
3. **Bolt the brake base (B) to the punch bolster, using the two bolts from the die holder. Do not tighten at this time.**
4. **Place the lower brake die (C) in the brake base (B).**
5. **Align the upper and lower dies and tighten the punch retaining nut and bolts in the base.**

7.2B SIX INCH BRAKE OPERATION

The brake must be center loaded, to prevent damage to the tool. The lower die can be rotated to expose four different vee opening sizes (1/2, 5/8, 7/8 and 1 inch). The maximum material capacity for this tool is 1/4 x 6 inch (6 x 152mm).

► **CAUTION: ALWAYS REMOVE THIS TOOL WHEN IT IS NOT IN USE.**

NOTE: If tool ever jams or gets stuck - REMOVE THE TOOL FROM THE MACHINE BEFORE ATTEMPTING TO FREE IT.

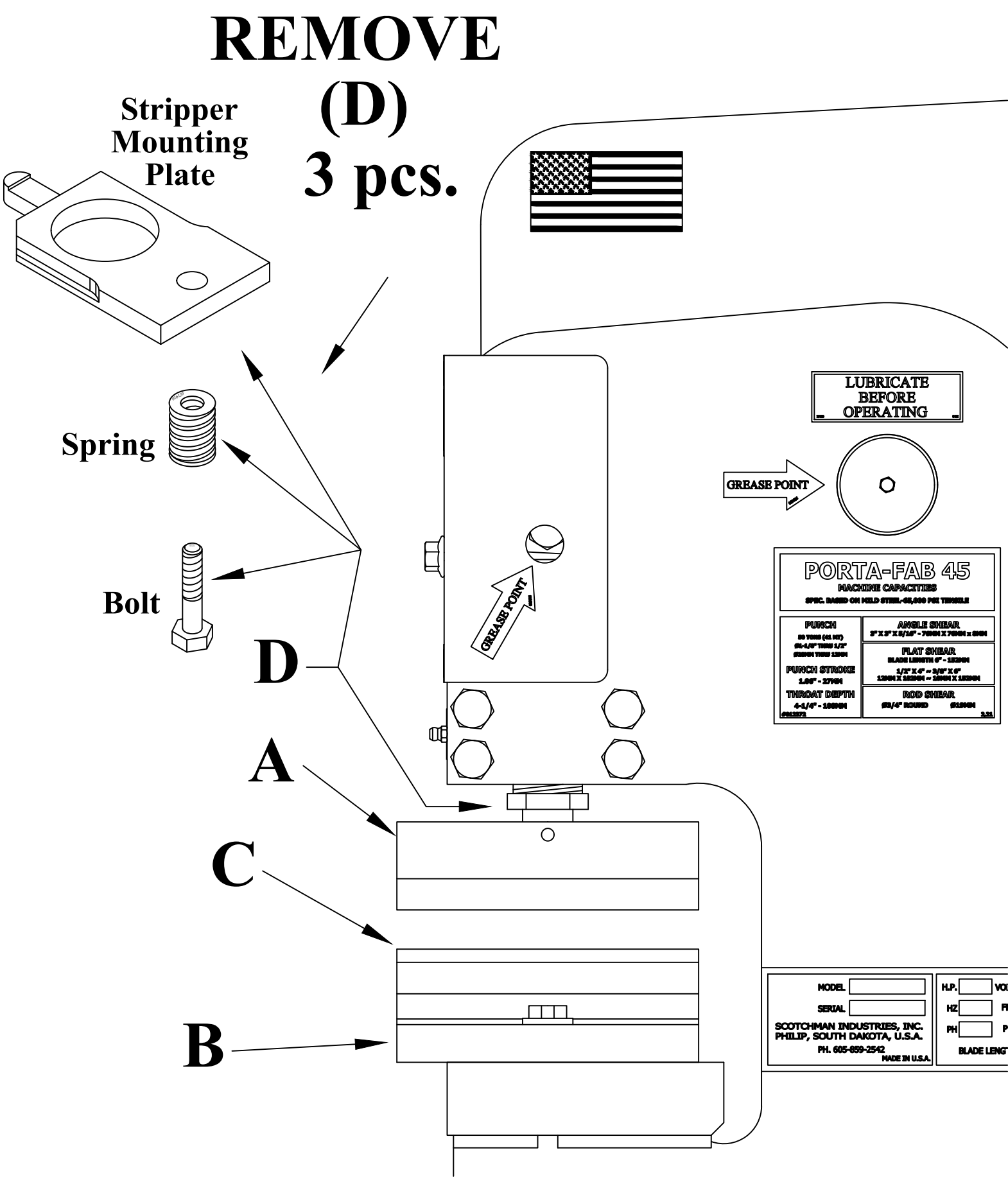
REMOVE
(D)
3 pcs.
Stripper
Mounting
Plate
Spring
Bolt
D
A
C
B
LUBRICATE
BEFORE
OPERATING
GREASE POINT
GREASE POINT
PORTA-FAB 45
MACHINE CAPACITIES
PUNCH
ANGLE SHEAR
FLAT SHEAR
PUNCH STROKE
1.06" - 27MM
THROAT DEPTH
4-1/4" - 108MM
ROD SHEAR
MODEL
SERIAL
H.P.
HZ
PH
SCOTCHMAN INDUSTRIES, INC.
PHILIP, SOUTH DAKOTA, U.S.A.
PH. 605-859-2542
MADE IN U.S.A.

FIGURE 11

7.3 EIGHT AND TWELVE INCH BRAKES

The eight and twelve inch brakes are component tools designed to bend and form mild steel. They mount on the tool table in place of the angle shear. The brakes are shipped with standard dies to accommodate material up to 1/4 inch (6mm) thick.

7.3A EIGHT AND TWELVE INCH BRAKE INSTALLATION

SEE FIGURE 12 ON THE FOLLOWING PAGE.

Both the eight and twelve inch brakes mount on the tool table in place of the Three in One shear and are anchored with the bolts provided.

EIGHT INCH BRAKE

The eight inch brake base is provided with four mounting holes. Only two are required to mount the tool on this machine. Mount the eight inch brake about 2-3/8" from the machine frame. Toward the back of the tool there are two holes that will align with the tapped holes in the tool table. Use the 2 bolts provided to mount tool to tool table as shown.

TWELVE INCH BRAKE

In the middle of the twelve inch brake base, there is one mounting hole to mount this tool. Only one bolt is used to mount the tool on this machine. Mount the twelve inch brake about 1-3/4" from the machine frame. The mounting hole should align with the 4th tapped hole from the front of the tool table.
Use the bolt provided to mount tool to tool table as shown.

IN FIGURE 13 ON PAGE 33, THERE IS A PRESS BRAKE TONNAGE CHART THAT WILL BE HELPFUL WHEN USING A BRAKE ON THIS MACHINE.

On this model, the twelve inch brake has twenty tons of force. The eight inch has twenty five tons of force. The twelve inch brake has an optional Brake Table with Scale available for it under P/N 026865. It is shown in further detail in our #20 Tooling Manual. P/N 002519 (see picture) is the complete 12" Brake and Brake Table with Scale.

NOTE: If tool ever jams or gets stuck - REMOVE THE TOOL FROM THE MACHINE BEFORE ATTEMPTING TO FREE IT.

8" Brake

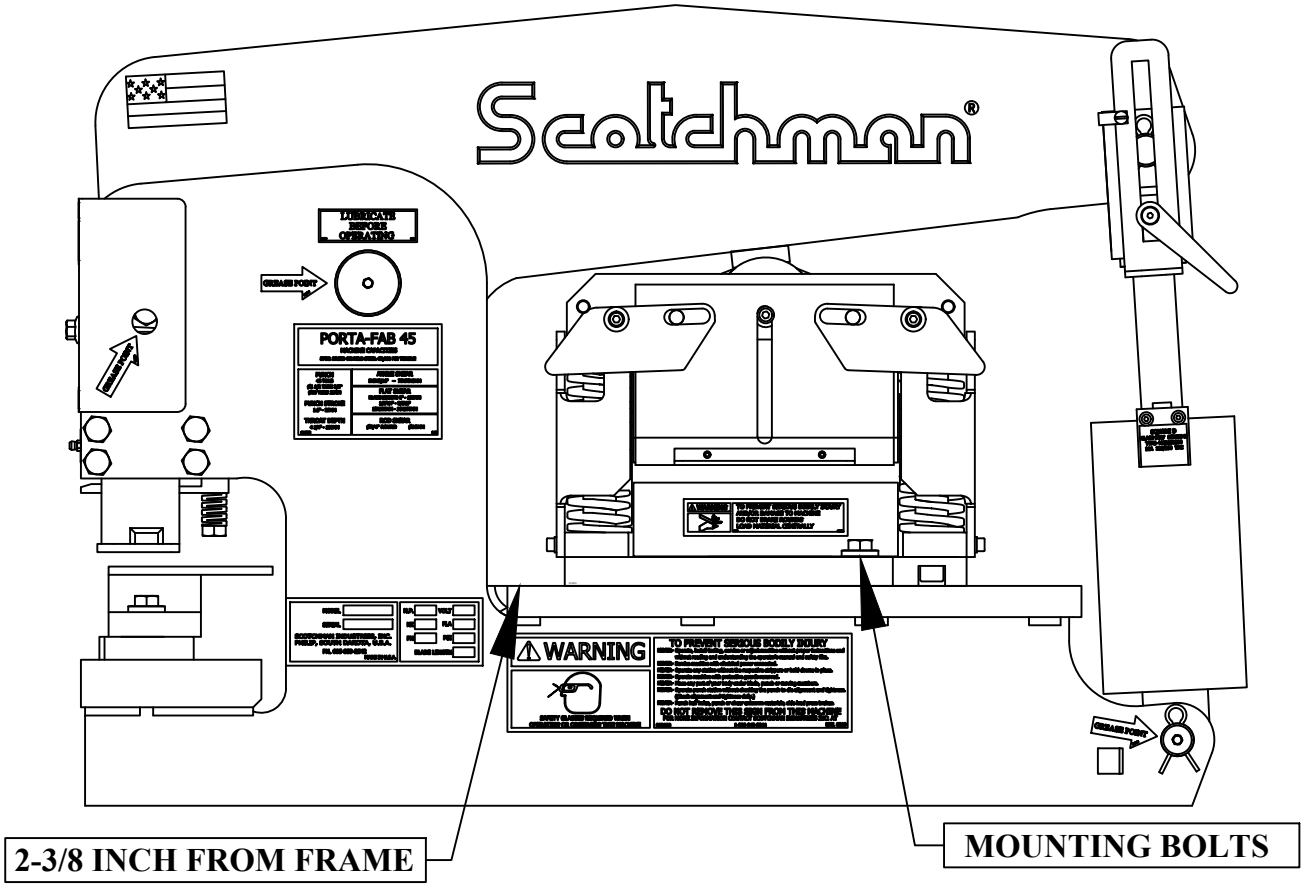

12" Brake

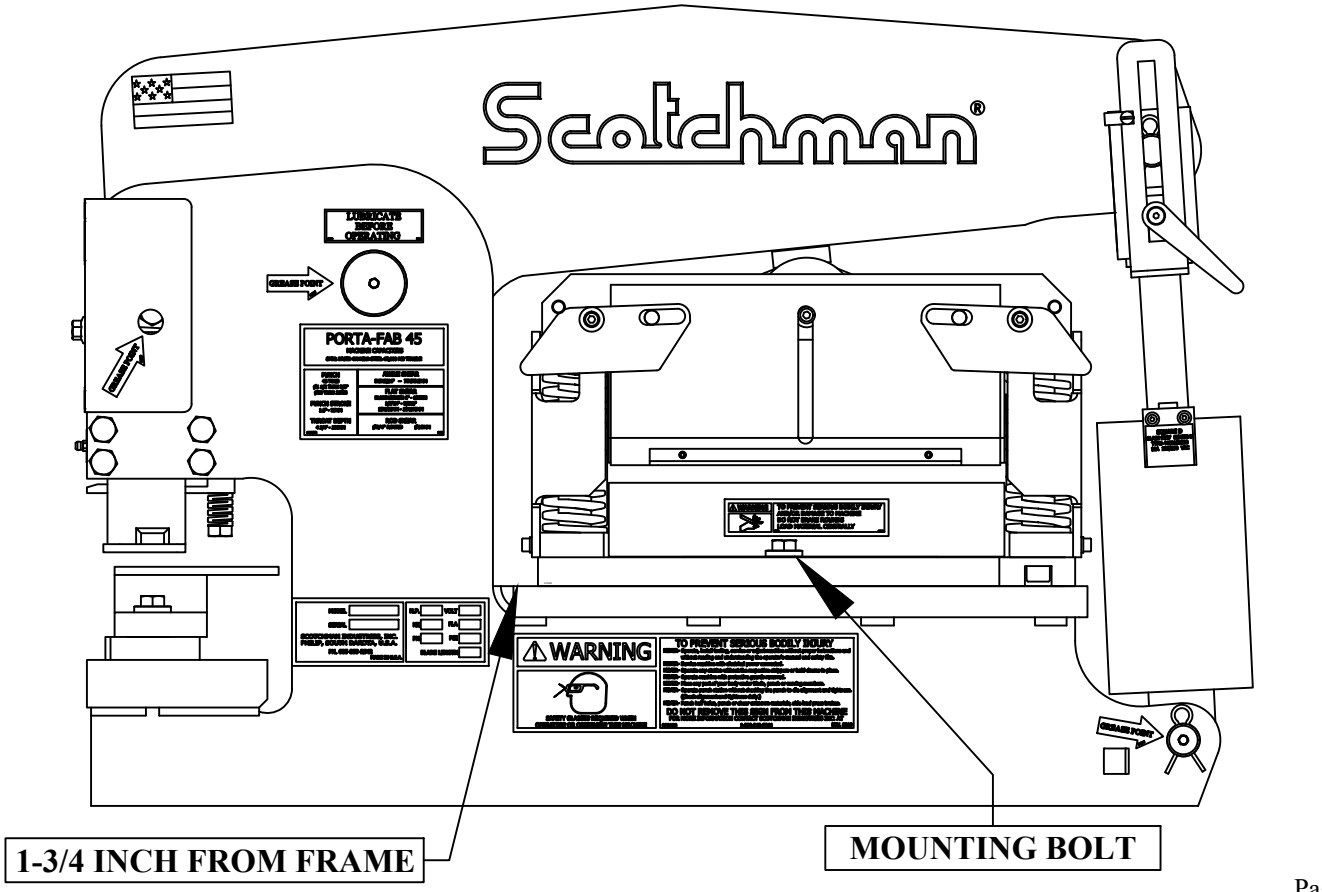

FIGURE 12

7.3B EIGHT AND TWELVE INCH BRAKE OPERATION

⌦ **CAUTION: NEVER PUT YOUR HANDS INTO OR AROUND A BRAKE WHILE IT IS IN OPERATION.**

Hold short pieces with tongs or similar devices.
In using the brake, it is necessary to load the brake centrally. (Visual centering is sufficient.) If work is performed off center, the guide pins could be damaged. The brake lift is provided by springs. If sticking occurs at the bottom of the stroke and the upper die does not return, usually a slight tap on the upper die is sufficient to free the guides.

⌦ **CAUTION: NEVER ATTEMPT TO FREE THE BRAKE BY HAND.**

Sticking can be caused by lack of lubrication, the complexity of the part being bent or bent guide pins.
Keep the guides well lubricated.
It is common practice to have the bottom die opening 8 times the thickness of the material being bent.

FOR TONNAGE REQUIREMENTS, SEE FIGURE 13 ON THE FOLLOWING PAGE.

If parts require bends less than 90 degrees, adjust the stroke until the desired bend is obtained.
A great variety of standard brake dies can be used with this unit.
These are available from Scotchman Industries or your local dealer.

⌦ **CAUTION: ALWAYS REMOVE THIS TOOL WHEN IT IS NOT IN USE.**

NOTE: If tool ever jams or gets stuck - REMOVE THE TOOL FROM THE MACHINE BEFORE ATTEMPTING TO FREE IT.

BRAKE TONNAGE CHART

PRESSURE IN TONS PER LINEAR FOOT REQUIRED TO MAKE 90 DEGREE AIR BEND IN MILD STEEL

THICKNESS OF METAL		WIDTH OF V-DIE OPENING																				
GAUGE	INCHES	1/4	5/16	3/8	1/2	5/8	3/4	7/8	1	1-1/8	1-1/4	1-1/2	2	2-1/2	3	3-1/2	4	5	6	7	8	10	12
20	.036	2.9	**2.2**	1.7	1.2	1.0																	
18	.048		4.0	**2.9**	1.6	1.3																	
16	.060			5.6	**3.6**	2.7	2.2	1.7															
14	.075				6.0	**4.5**	3.4	3.0	2.5	2.1													
13	.090					6.8	**5.4**	4.3	3.7	3.3	2.9												
12	.105					10.1	7.4	**6.3**	5.4	4.4	4.0	3.2											
11	.120						10.5	8.8	**7.2**	6.2	5.4	4.3	3.2										
10	.135							11.3	9.6	**8.4**	5.6	4.1											
9	.150								13.1	11.9	**9.0**	6.7	5.2	3.5									
7	.188									16.4	14.0	**11.2**	7.6	5.8	4.5								
1/4	.250										28.8	22.0	**15.3**	11.5	9.1	7.5	6.2						
5/16	.313											38.0	26.0	**19.2**	16.0	12.5	10.6	7.6					
3/8	.375												41.0	29.9	**24.0**	19.4	16.0	12.3	9.3				
7/16	.438													45.2	35.0	**28.0**	24.0	17.0	14.6	11.1			
1/2	.500														47.9	39.0	**33.1**	24.0	19.0	15.6	12.7		
5/8	.625															69.5	58.0	**42.2**	32.4	26.0	23.0	16.5	
3/4	.750																92.0	69.0	**52.2**	42.2	36.0	27.0	21.0
7/8	.875																	104	80.0	**63.0**	52.5	39.4	31.2
1.0	1.00																		112	90.0	**76.0**	56.2	44.0

PRESSURES HIGHLIGHTED IN **BOLD** ARE FOR DIES WITH FEMALE DIE OPENINGS APPROX. 8 TIMES METAL THICKNESS, WITH RADIUS ON MALE DIE EQUAL TO METAL THICKNESS, AND ARE CONSIDERED IDEAL FOR RIGHT ANGLE BENDING.

BENDING PRESSURES REQUIRED FOR OTHER METALS AS COMPARED TO 65,000 P.S.I. TENSILE MILD STEEL ON CHART:

SOFT BRASS - - - - - - - - - - - - 50% OF PRESSURE LISTED
SOFT ALUMINUM - - - - - - - - - 50% OF PRESSURE LISTED
ALUMINUM ALLOYS (HEAT TREATED) - SAME AS STEEL
STAINLESS STEEL - - - - - - - - - 50% MORE THAN STEEL
CHROME MOLYBDENUM - - - - 100% MORE THAN STEEL

FIGURE 13

7.4 PIPE NOTCHER

The pipe notcher is a component tool designed to saddle cut pipe or tubing for applications such as railings. There are dies available to notch angles in tubes and pipe, also.
For prices and availability, contact your local dealer or the factory.

7.4A PIPE NOTCHER INSTALLATION

SEE FIGURE 14 ON THE FOLLOWING PAGE.
The pipe notcher can be installed in either the punch station or on the tool table.

TO MOUNT THE PIPE NOTCHER IN THE PUNCH STATION:

1. **Remove the die holder, die holder plate, stripper, punch and punch retaining nut.**
2. **Install the punch pusher (A) in the punch barrel.**
3. **Install the return springs, the upper die and the lower die in the pipe notcher housing (C).**
4. **Mount the pipe notcher so that the cutting dies face away from the machine. Use the bolts provided to anchor the tool in place. Align the tool over the slug hole in the bolster, to assure proper slug removal.**

► **NOTE: THE PUNCH PUSHER WILL NOT ALIGN DIRECTLY OVER THE PIPE NOTCHER. THIS IS OK.**

TO MOUNT THE PIPE NOTCHER ON THE TOOL TABLE:

1. **Install the return springs, the upper die and the lower die in the housing.**
2. **Bolt the beam pusher (B) to the upper die.**
3. **Place the tool on the tool table with the cutting dies facing the operator's side of the machine.**
4. **Align the slug slot in the tool with the slot in the tool table. Anchor the tool with the bolt provided.**

⌦ **CAUTION: WITH THE TOOL MOUNTED IN EITHER STATION, IT IS NECESSARY TO SET THE DOWN-STROKE OF THE MACHINE TO PREVENT DAMAGE TO THE TOOL. THE UPPER DIE SHOULD NOT PASS THE LOWER DIE BY MORE THAN 1/32 OF AN INCH (.7MM).**

NOTE: If tool ever jams or gets stuck - REMOVE THE TOOL FROM THE MACHINE BEFORE ATTEMPTING TO FREE IT.

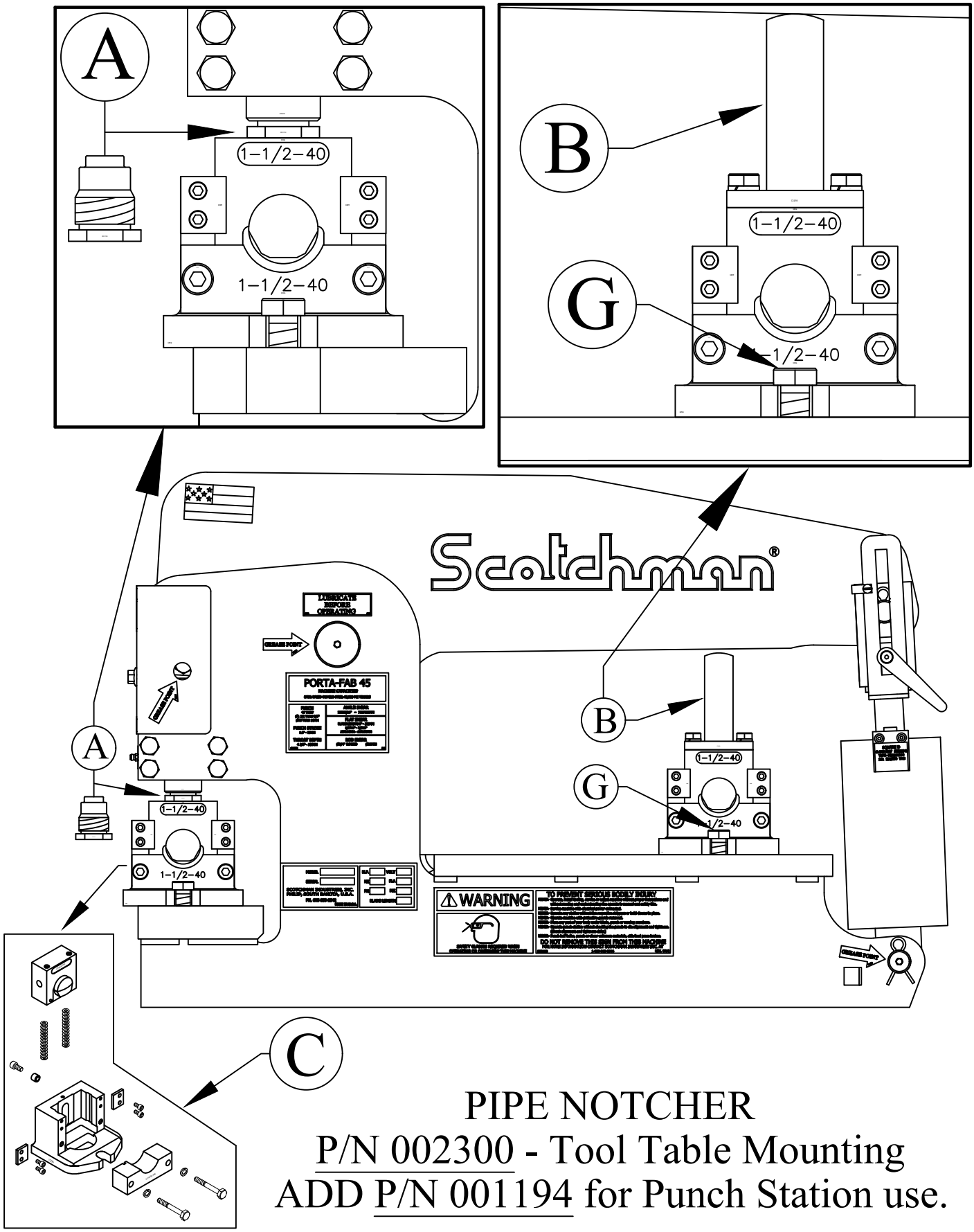

PIPE NOTCHER
P/N 002300 - Tool Table Mounting
ADD P/N 001194 for Punch Station use.

FIGURE 14

7.4B PIPE NOTCHER OPERATION

The pipe notcher is a vendor item for Scotchman Industries. The following is the manufacturer's recommendation for maintenance and alignment of this tool.

PLEASE READ CAREFULLY BEFORE USE OF TOOLING.

TO ACHIEVE THE BEST RESULTS FROM YOUR UNIT, please observe these simple rules.

A. Keep the unit clean. Whenever dirt or metal chips accumulate, remove the 8mm limit screw located in the center, at the rear of the punch. Lift out the punch holder and the two springs. Clean the unit with solvent.

B. Never remove the M-10 dowel pin from the upper die (Vendored item). Generally, it should not be necessary to remove the set screw that holds the insert in the top die (Scotchman product).

C. Check the alignment of the unit. After cleaning the unit, always check the alignment of the punch and die. To check the alignment, insert the punch and die holder, without the springs, into the housing and check the gap.

SEE FIGURE 15 ON THE FOLLOWING PAGE.

If proven correct, tighten the two M-10 socket head screws holding the lower die section in place. Apply some high pressure lube all around the inside of the housing. Re-assemble the unit, reversing the above procedures.

Before operating, lubricate the back and sides of the upper die with way oil. Repeat this lubrication once daily. Apply cutting oil or motor oil to the cutting dies before the first cut and every 10 to 15 cuts, thereafter.

7.4C PIPE NOTCHER CAPACITIES

Two inch (2") schedule 40 pipe is the maximum thickness that can be cut.

Lighter weight tubing may be cut but will probably require different dies for best cutting results.

Separate dies are required for each size of pipe or tubing being notched.

⌦ **CAUTION: ALWAYS REMOVE THIS TOOL WHEN IT IS NOT IN USE.**

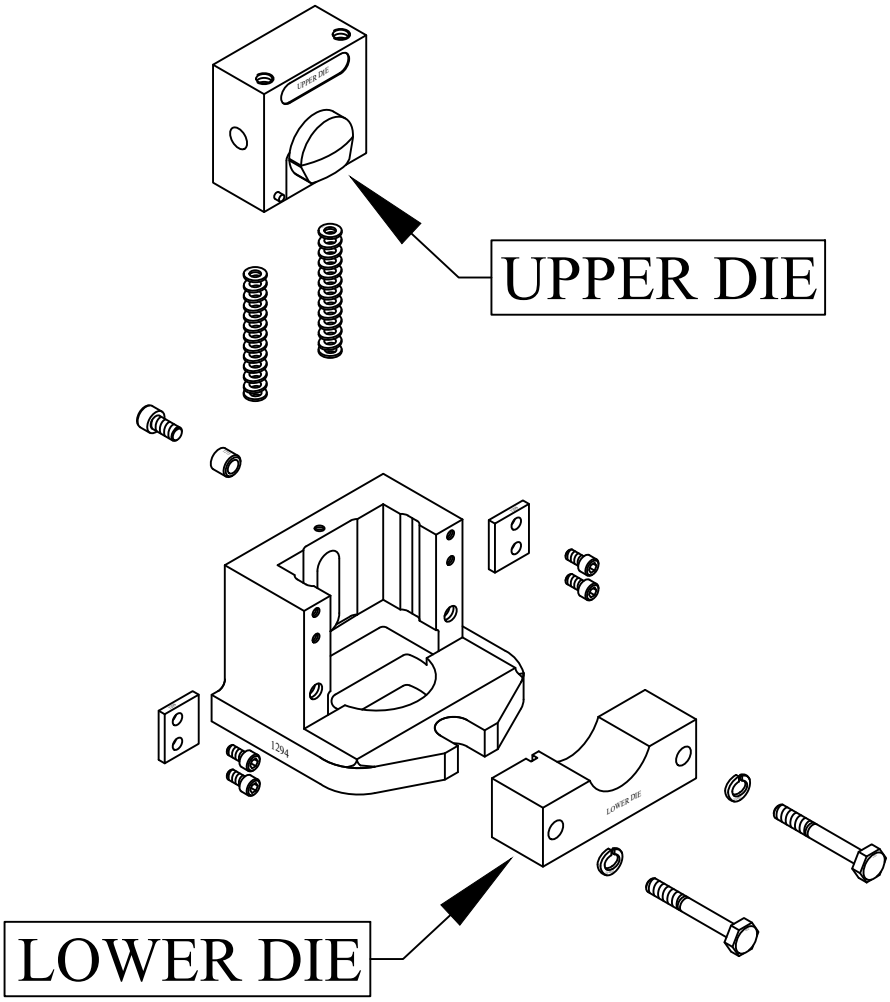

PROPER ALIGNMENT
OF PIPE NOTCHER DIES

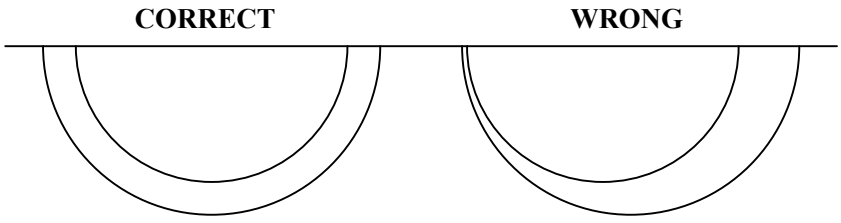

FIGURE 15

7.5 RECTANGLE NOTCHER

The rectangle notcher is a component tool designed to make rectangle and vee notches in angle iron and flat stock. The maximum capacity of this tool is 2 by 1-3/4 inch (51 x 44mm) rectangle notch in 1/4 inch (6mm) material or a 1-1/2 inch (38mm) vee notch.

7.5A RECTANGLE NOTCHER INSTALLATION

SEE FIGURE 16 ON THE FOLLOWING PAGE.

1. **Operate the machine until the cylinder completely retracts.**

   NOTE: THE STRIPPER MOUNTING PLATE (D) MUST BE REMOVED TO OPERATE THIS TOOL. FAILURE TO REMOVE THE STRIPPER MOUNTING PLATE WILL CAUSE DAMAGE TO THE BRAKE.
2. **Remove the die holder, die holder plate, stripper, punch and punch retaining nut.**
3. **Thread the notcher pusher (A) into the punch ram and tighten it with a wrench.**
4. **Place the tool (B, E & F) on the punch bolster. Raise the upper notcher ram (B) up to the pusher (A) and tighten the set screw (C).**
5. **Start the mounting bolts (D) in the lower die. Align the upper ram and lower die and tighten the mounting bolts (D).**

7.5B RECTANGLE NOTCHER OPERATION

1. **Lubricate the upper ram and lower die before the first cut and every 10 to 15 cuts, thereafter.**
2. **Place the material to be notched between the upper and lower dies and make the cut.**
3. **After the cut is made, remove the material before releasing the foot pedal.**

► **CAUTION: ALWAYS REMOVE THIS TOOL WHEN IT IS NOT IN USE.**

NOTE: If tool ever jams or gets stuck - REMOVE THE TOOL FROM THE MACHINE BEFORE ATTEMPTING TO FREE IT.

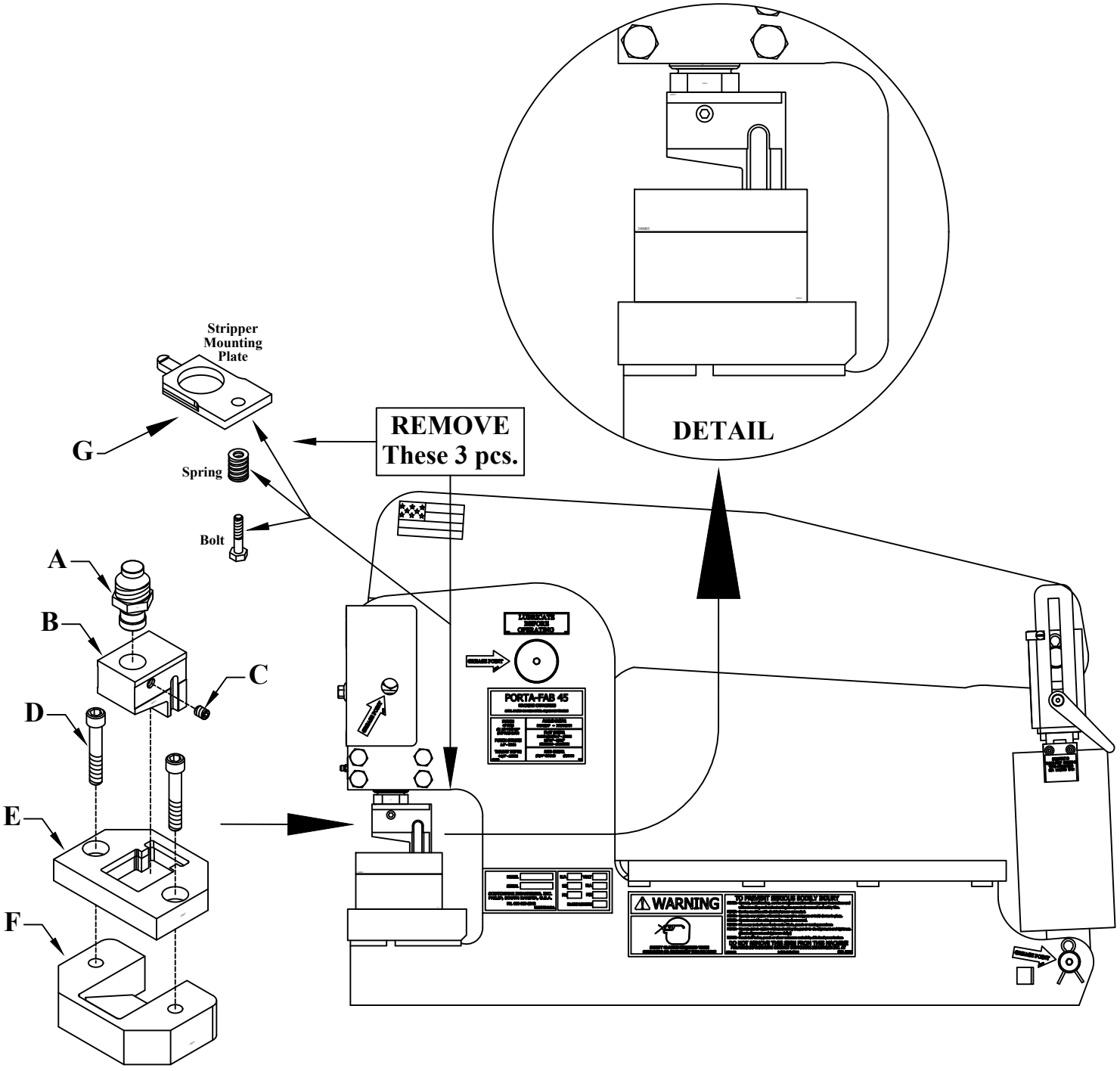
Stripper
Mounting
Plate
G
Spring
Bolt
REMOVE
These 3 pcs.
DETAIL
A
B
C
D
E
F
PORTA-FAB 45
WARNING

FIGURE 16

7.6 PICKET FENCE TOOL

The picket fence tool is designed to make picket points on square tubing for ornamental fence applications. The tool has a maximum capacity of 1 inch (25mm), 16 gauge tubing.

7.6A PICKET FENCE TOOL INSTALLATION

SEE FIGURE 17 ON THE FOLLOWING PAGE.

This tool mounts on the tool table in place of the Three in One shear and is anchored with the same bolts.

Lubricate the pressure block (A) before installing it on the tool and after every two hours of operation.

7.6B PICKET FENCE TOOL OPERATION

1. **Rotate the tube guide on the front of the tool to the size of tube you are shearing. Remove the tube guide if you are shearing 1 inch tubing.**
2. **Adjust the tube stop (B) just low enough to contact the upper edge of the tube.**
3. **Adjust the rest stop (C) so that it is approximately half of the tube size below the lower die.**
4. **Feed the tube into the tool until it contacts the stop (B). Depress the shear pedal.**
5. **Lubricate the dies every 10 to 15 cuts and grease the ram daily.**

⌦ **CAUTION: ALWAYS REMOVE THIS TOOL WHEN IT IS NOT IN USE!**

NOTE: If tool ever jams or gets stuck - REMOVE THE TOOL FROM THE MACHINE BEFORE ATTEMPTING TO FREE IT.

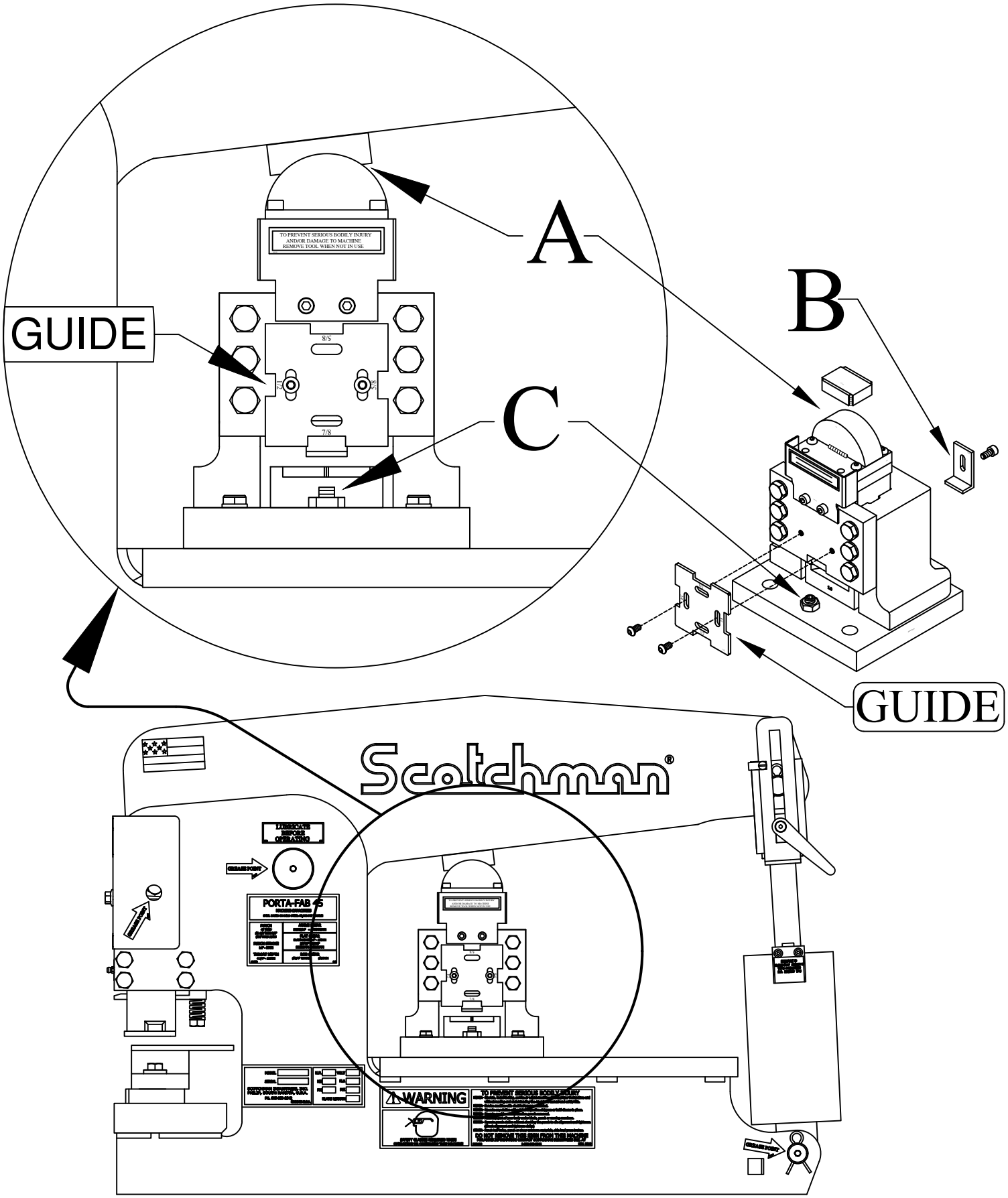
A
B
C
GUIDE
GUIDE
TO PREVENT SERIOUS BODILY INJURY AND/OR DAMAGE TO MACHINE REMOVE TOOL WHEN NOT IN USE
8/5
7/8
Scotchman
LUBRICATE BEFORE OPERATING
GREASE POINT
PORTA-FAB 45
WARNING
GREASE POINT

FIGURE 17

7.7 6 x 6 NINETY DEGREE NOTCHER

The six inch (152mm) ninety degree notcher is a component tool designed to make square and vee notches in angle iron and flat stock. The maximum capacity of the tool is 3 x 3 x 1/4 inch (76 x 76 x 6mm) or 6 x 6 x 1/8 inch (152 x 152 x 3mm).

7.7A 6 x 6 NINETY DEGREE NOTCHER INSTALLATION

SEE FIGURE 18 BELOW.

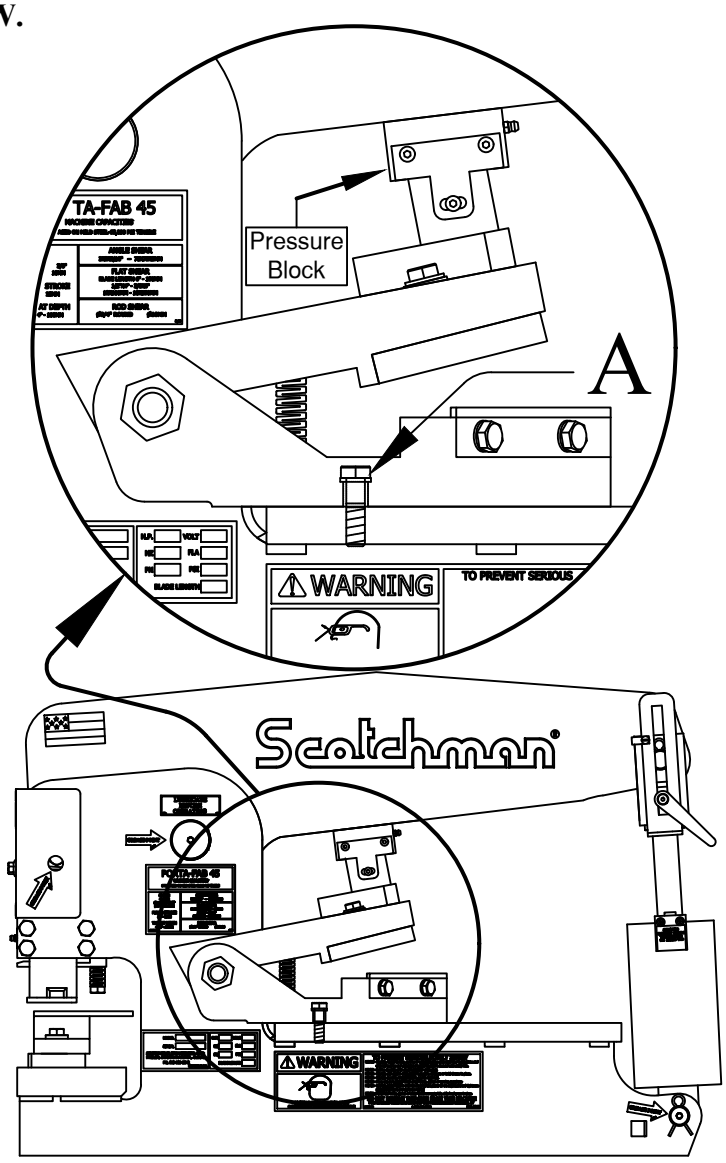

FIGURE 18

<u>TO INSTALL THE NOTCHER ON THE TOOL TABLE</u>, the tool should be mounted as close to the frame as possible and anchored through the bottom of the notcher casting, as shown, with the bolts and washers (A) provided.

<u>NOTE</u>: If tool ever jams or gets stuck - REMOVE THE TOOL FROM THE MACHINE <u>BEFORE</u> ATTEMPTING TO FREE IT.

7.7B 6 x 6 NINETY DEGREE NOTCHER OPERATION

Lubricate the blades before starting and every 10 to 15 cuts, thereafter. Oil the pressure block every two hours of operation. Do not attempt to shear material thicker than 1/4 inch (6mm) and never side load the notcher. The slug must be removed after every cut. Remove the slug with a magnetic probe or tongs.

➲ **DO NOT REMOVE THE SLUGS BY HAND!**

⌦ **CAUTION: ALWAYS REMOVE THIS TOOL WHEN IT IS NOT IN USE.**

7.7C BLADE REPLACEMENT

The lower blades are symmetrical and can be rotated to expose four cutting edges.

The upper blade has two cutting edges.

TO ROTATE OR REPLACE THE BLADES, USE THE FOLLOWING STEPS:

⌦ **CAUTION: THE UPPER CASTING OF THE NOTCHER IS HEAVY ENOUGH TO CAUSE INJURY IF DROPPED. USE CARE WHEN HANDLING THIS TOOL.**

1. **Remove the return springs from the unit.**
2. **To allow further adjustments, rotate or replace the upper blade and snug bolts, only.**
3. **Rotate or replace the lower blades.**
4. **Lower the upper blade down until it just passes the lower blade, approximately 1/16 inch (1.5mm).**
5. **Adjust the upper blade until the point almost touches the lower blades.**
6. **Center the rear of the upper blade with the lower blades. There should be a clearance of approximately .005 of an inch (.12mm) on each side.**
7. **Tighten the upper blade bolts.**

   Raise and lower the upper casting several times by hand, to check blade alignment.

   After alignment, tighten the back up set screws, making sure that the upper blade does not move.

7.8 SQUARE TUBE SHEAR

The square tube shear is designed to shear square tubing from 1/4" to 1".

16 gauge is the maximum material thickness.

7.8A SQUARE TUBE SHEAR INSTALLATION

SEE FIGURE 19 ON THE FOLLOWING PAGE.

The tool mounts on the tool table in place of the Three-In-One Shear and is anchored with the same bolts (C). Lubricate the rocker block (A) before installing the tool and after every two hours of operation.

7.8B SQUARE TUBE SHEAR OPERATION

1. **Feed the tubing through the shear to the desired length and depress the foot pedal.**
2. **Lubricate the blades every ten to fifteen cuts..**

⌦ **CAUTION: ALWAYS REMOVE THIS TOOL WHEN IT IS NOT IN USE.**

7.9 OPTIONAL DIE HOLDERS AND STRIPPERS

7.9A 2-5/8 INCH (66 MM) DIE HOLDER

The optional 2-5/8 inch (66mm) die holder is of the same design as the standard die holder. It is used in oversized punching applications. FOR APPLICATIONS, REFER TO THE TOOLING MANUAL. Always use the preferred method of aligning punches and dies. REFER TO SECTION 6.1.

79.B 4 x 6 DIE HOLDER

The 4 x 6 inch die holder is used in oversize punching applications. FOR APPLICATIONS, REFER TO THE TOOLING MANUAL Always use the preferred method of aligning punches and dies referred to in SECTION 6.1.

7.9C OPTIONAL STRIPPER

The optional stripper is used in oversize punching applications. FOR APPLICATIONS, REFER TO THE TOOLING MANUAL.

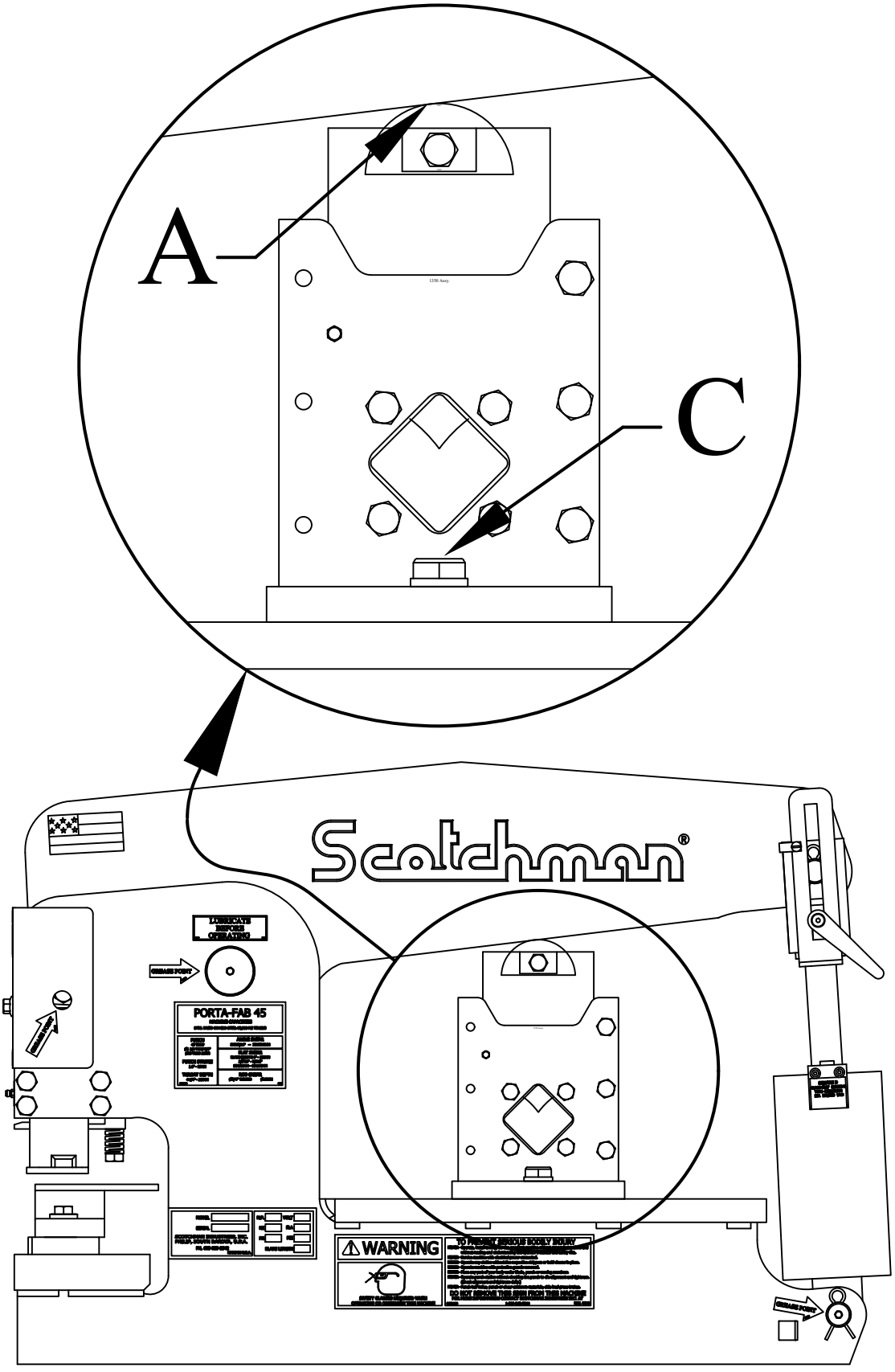

NOTE: If tool ever jams or gets stuck - REMOVE THE TOOL FROM THE MACHINE BEFORE ATTEMPTING TO FREE IT.

FIGURE 19

7.10 MULTI-SHEAR TOOL

The Multi-Shear Tool is designed to shear standard Unistrut profiles, as well as many other specialty profiles.

7.10A MULTI-SHEAR TOOL INSTALLATION

SEE FIGURE 20 ON THE FOLLOWING PAGE.

If the punch and die are mounted on the machine, remove them.

1. **Run the Punch Beam above the too table, up to its highest setting.**
2. **Place the tool on the tool table under the punch beam, keeping it towards the "punch end" of the tool table.**
3. **Locate the clamp (B) and the bolts and washers (C) and loosely mount the tool to the fourth set of holes from the left on the tool table. (Do not place the Multi-Shear Tool any further towards the rear of the machine due to possible "bottoming out" condition.**
4. **Make sure that the tool is located under the beam correctly by aligning the pressure cap (A) under the beam. Once the tool is squarely under the beam, tighten the bolts (C) for the clamp (B) to hold it in place.**
5. **Set the upstroke of the machine so that the size of material that you want to shear will feed through the tool.**
6. **Make sure that the upstroke is set so that there is spring tension on the pressure block at all times.**
7. **Set the down-stroke of the machine so that the moving blade travels only far enough to shear the material and, no further.**

7.10B MULTI-SHEAR TOOL OPERATION

1. **Set the down-stroke of the machine so that the moving blade travels only far enough to shear the material and, no further. "Bottoming out" of this tool may ruin it!!**
2. **Feed the material through the shear to the desired length and depress the foot pedal.**
3. **Grease the pressure cap (A) before using and every two hours, thereafter.**
4. **Lubricate the blades every ten to fifteen cuts.**

NOTE: If tool ever jams or gets stuck - REMOVE THE TOOL FROM THE MACHINE BEFORE ATTEMPTING TO FREE IT.

⌦ **CAUTION: ALWAYS REMOVE THIS TOOL WHEN IT IS NOT IN USE.**

NOTE: See-Thru Guard is for Clarity

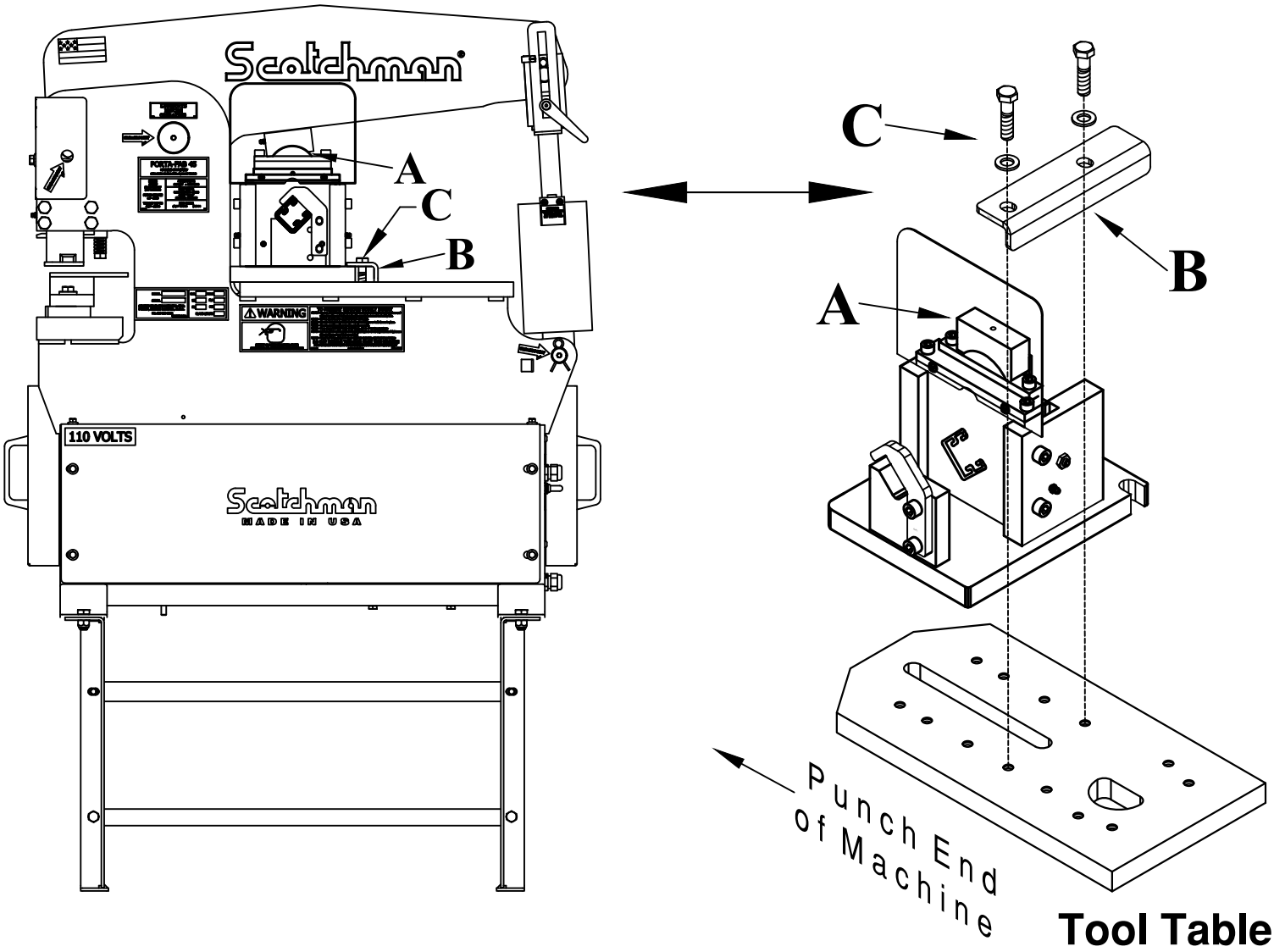

FIGURE 20

7.11 WELD COUPON BENDER TOOL

The Weld Coupon Bender Tool is designed to bend welded test coupons into "U" and "V" shapes for the purpose of testing soundness and ductility of welds. The maximum size of a test clip is 7" long x 2" wide x 3/8" (178 x 51 x 10mm) thick. Rollers are 4" (102mm) apart.

7.11A WELD COUPON BENDER TOOL INSTALLATION

SEE FIGURE 21 ON THE FOLLOWING PAGE.

The Weld Coupon Bender Tool mounts on the tool table under the upper arm and is held in place with the two M-12 bolts and flat washers (A). Use the 4th set of holes from the left (punch end) on the tool table. It mounts as shown in the drawing. Make sure that the Rocker Cap (B) is squarely under the arm and that the stationary back of the Coupon Bender is clear of the moving arm of the ironworker. The down-stroke must be set properly with this tool. On the left side of the tool, under the roller, there are two lines machined in the tools back support. The upper line is for when the "V" die is used and the lower line is for when the "U" die is used. The stroke is to be set by aligning the bottom of the ram with the appropriate line machined in the back support. Please see the drawing under "Setting the Stroke".

7.11B WELD TESTER OPERATION

1. **Grease the Rocker Cap (B) between the upper arm and the tool and again after every two hours of use. Grease the ram, using the two grease zerks on the side.**

2. **Lightly grease the rollers, using the two grease zerks on the front of the weld tester. Make sure that the rollers still turn easily. Too much grease can cause the tool to not work properly.**

3. **Lightly lubricate the underside of the die and outside of the two rollers, with a spray lube such as WD-40 and, again, every 10-15 bends, thereafter.**

4. **Insert the weld test coupon by sliding it onto the rollers. Using the back of the weld tester, square up the test piece and then, move it forward enough to center under the die.**

   Make sure that the weld test coupon is square and centered under the die.

5. **Make sure that the down-stroke of the tool is set so that the bottom of the ram - NOT the die - is aligned with the correct scribe line.**

6. **After bending the weld test coupon, let the tool return to the resting position. Remove the test coupon and inspect the weld.**

> **NOTE: If tool ever jams or gets stuck - REMOVE THE TOOL FROM THE MACHINE BEFORE ATTEMPTING TO FREE IT.**

► **REMOVE THE WELD TESTER WHEN IT IS NOT IN USE.**

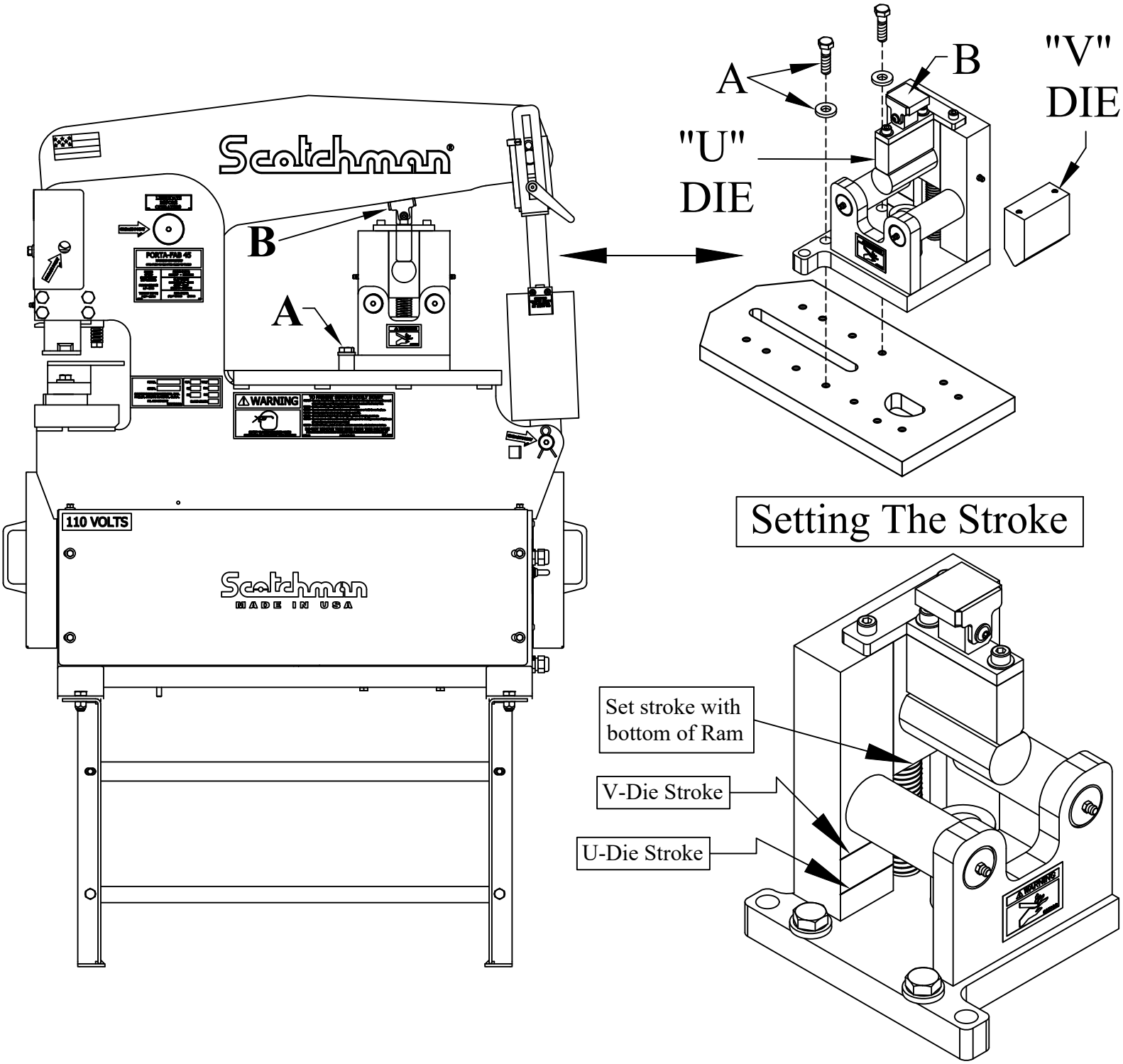
Scotchman
B
A
WARNING
110 VOLTS
Scotchman
MADE IN USA
A
B
"V"
DIE
"U"
DIE
Setting The Stroke
Set stroke with
bottom of Ram
V-Die Stroke
U-Die Stroke

FIGURE 21

7.12 OPEN END BRAKE

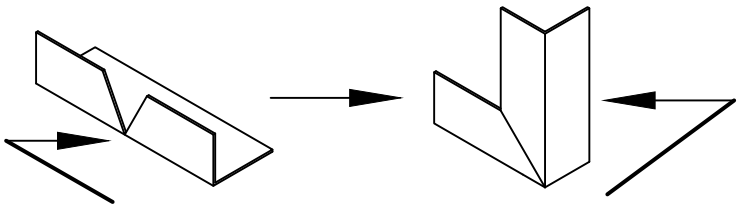

The Open End Brake is a tool designed to bend notched angle iron into a "picture frame" corner. It can bend flat metal as well. Please scan the QR Code on the following page with the camera on your phone to see this tool in use.

7.12A OPEN END BRAKE INSTALLATION

SEE FIGURE 21A ON THE FOLLOWING PAGE.

The Open End Brake tool mounts on the tool table under the upper arm and is held in place with an M-12 bolt and flat washer (A). Note that the tool can be mounted with the open end facing the operator, or it can be mounted with the open end facing toward the hydraulic cylinder.

The Pressure Cap (B) is what the arm pushes on. The pressure cap is attached to a rail along the top die via two set screws (C). The Pressure Cap can be moved along the top die, but it is recommended to keep it centered on the rail.

7.12B OPEN END BRAKE OPERATION

The following apply to this Tool regardless of the Ironworker Model.

1. Grease the Guide Post every 2 hours of operation. There are (2) Grease Zerks - one on each side of the Guide Post.

2. The recommended Die Size is 8 times the thickness of the Material. Brake is supplied with (2) One Inch Dies as Standard Equipment. The Maximum Recommended Material with the Standard Dies is 1/4 inch Thick.

3. NEVER put your hands into or around this Brake when it is in operation!! Hold short pieces with Tongs or similar device.

NOTE: If tool ever jams or gets stuck - REMOVE THE TOOL FROM THE MACHINE BEFORE ATTEMPTING TO FREE IT.

4. Use a pry bar to free it and repair or replace whatever caused the jam. The sticking of the Brake can be caused by: Complexity of the part, lack of Lubrication or Interference between the Guide and Post.

5. ALWAYS - Remove This Tool From The Machine When Not In Use!!

The "OPEN" end of brake is facing the operator.

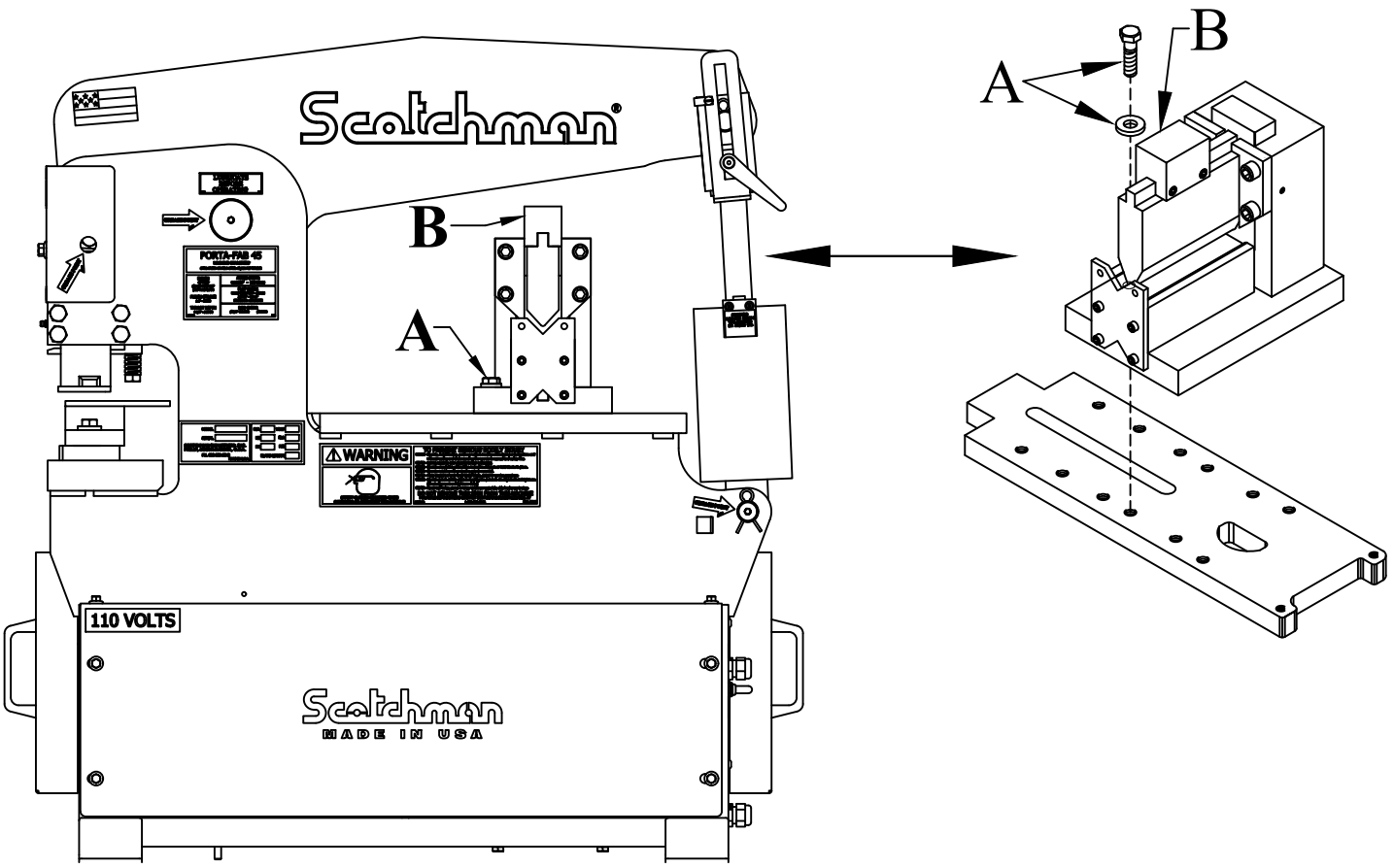

The "OPEN" end of brake is facing the hydraulic cylinder.

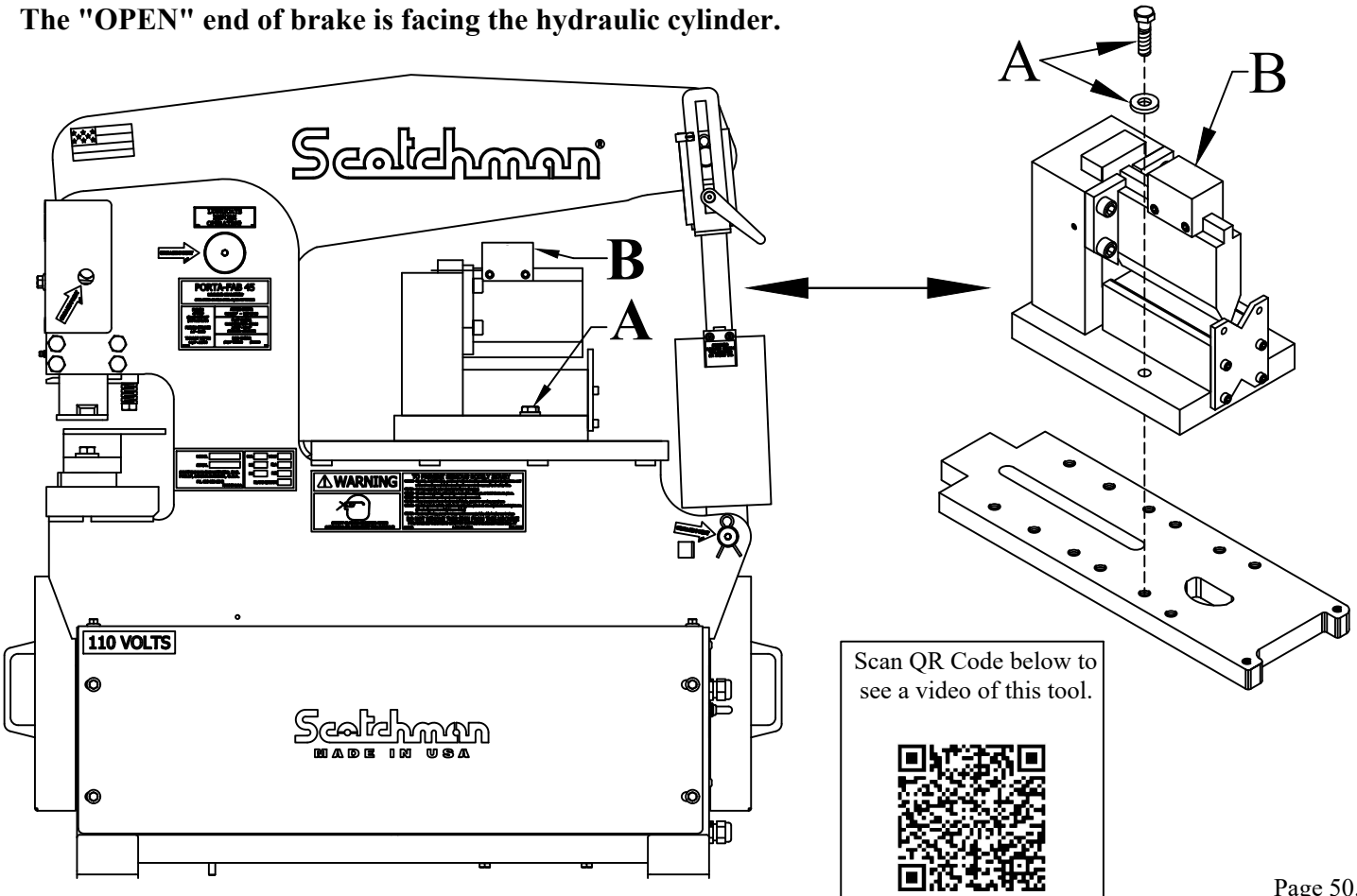

Scan QR Code below to see a video of this tool.

FIGURE 21A

SCOTCHMAN

BEST IN THE BUSINESS WARRANTY

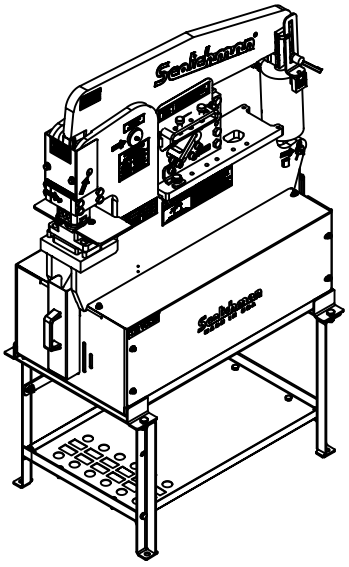

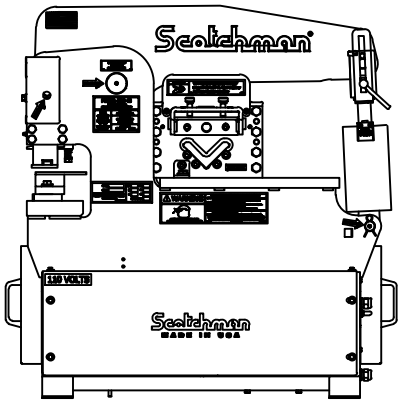

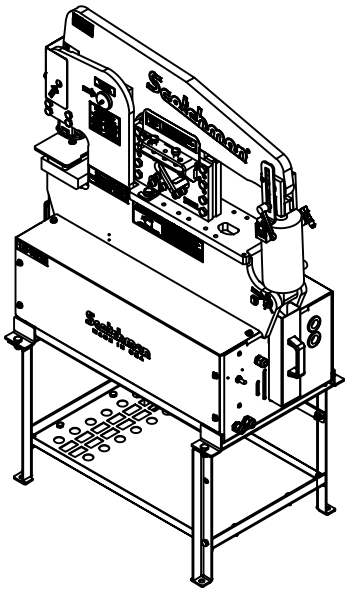

MADE IN THE USA

8.0 TROUBLE SHOOTING GUIDE

8.1 ELECTRICAL-MOTOR

A. IF THE MOTOR WILL NOT START:

1. Make sure that you have the machine plugged into an outlet with adequate power to supply the machine.

2. Check the wiring connections on the switch and the motor.

B. THE MOTOR RUNS BUT THE MACHINE WILL NOT CYCLE.

1. Check the rotation of the motor. The rotation should be clockwise when viewed from the fan end of the motor.

2. Check the wiring connections to the valve and the foot switch.

3. Check the level of the hydraulic fluid in the reservoir. The fluid should be approximately 1/2 inch (12mm) below the top of the reservoir. FOR RECOMMENDED FLUIDS, refer to section 5.0.

C. THE MOTOR RUNS BUT THE MACHINE LACKS POWER.

1. Make sure that the electrical supply lines to the machine are of adequate gauge and length. FOR FOR RECOMMENDED SIZES, REFER TO SECTION 4.4.

2. The problem may be mechanical. Make sure that all grease fittings have been well lubricated.

3. REFER TO SECTION 8.2 ON HYDRAULICS BELOW.

8.2 HYDRAULIC

THE MOST COMMON HYDRAULIC PROBLEMS ARE:

1. Low level of hydraulic fluid in the reservoir: The reservoir holds 2 U.S. gallons (7.6 liters). The level should be 1/2 inch (12mm) below the top of the reservoir.

2. Low pressure caused by worn or damaged parts in the cylinder or pump: There is a pressure port provided on the machine to check the system pressure. The pressure port is in the fitting in the top port of the cylinder. A pressure gauge with a minimum of three thousand (3,000) P.S.I. (207 BAR) is required. With the machine's power off, install the pressure gauge. Power the machine and cycle it to the end of the stroke in one direction or the other, watching the gauge for a reading. The system pressure of this machine is 2,500 P.S.I. (172 BAR). The pressure adjustment is on the side of the manifold between the motor and the pump. Turning the adjusting screw in should increase the pressure. If the pressure cannot be adjusted, contact your local dealer or the factory.

⌦ **CAUTION: NEVER SET THE PRESSURE OF THE MACHINE ABOVE 2,500 PSI (172 BAR).**

► **NOTE: FITTINGS AND GAUGE TO CHECK HYDRAULIC PRESSURE ARE AVAILABLE FROM SCOTCHMANS. SEE SECT. 9.4 POWER UNIT FOR PART NUMBERS.**

8.3 CYLINDER SEAL REPLACEMENT

Use the following steps to replace the seals in the hydraulic cylinder:

SEE FIGURE 22 ON THE FOLLOWING PAGE.

1. **With the arm up, turn the machine's power OFF.**
2. **Block the arm up on the tool table. SEE ITEM (A).**
3. **Remove the hoses from the cylinder and allow the fluid to drain.**
4. **Remove the cylinder clevis pin (B) and swing the cylinder out away from the arm.**
5. **Remove the retaining ring (C) from the top of the cylinder.**
6. **Tap the head down into the tube and remove the second ring (D).**
7. **Place the pin (B) through the clevis and pull the cylinder apart, using a come-along or similar device.**
8. **Remove the locking nut from the end of the shaft and slide the piston and head off of the shaft.**
9. **Replace all of the seals. There will be extra seals in the kit. Match the replacement seals with the old ones and discard the rest.**
10. **Clean all parts, including the inside of the tube, and check all parts for nicks or scratches.**
11. **Oil all of the seals before reassembling the cylinder.**
12. **After the head and piston are assembled on the shaft, torque the locking nut to 100 foot pounds.**
13. **Tap the shaft assembly back into the tube, using a brass or plastic hammer and then, install the ring (D)..**
14. **Tap the head into the tube and install the retaining ring (C).**
15. **Replace the cylinder clevis pin (B) and connect the hoses to the cylinder.**
16. **Use care when removing the block (A). The cylinder does not have fluid in it and the arms may drop some when the block is removed.**
17. **Cycle the machine several times before performing any work.**

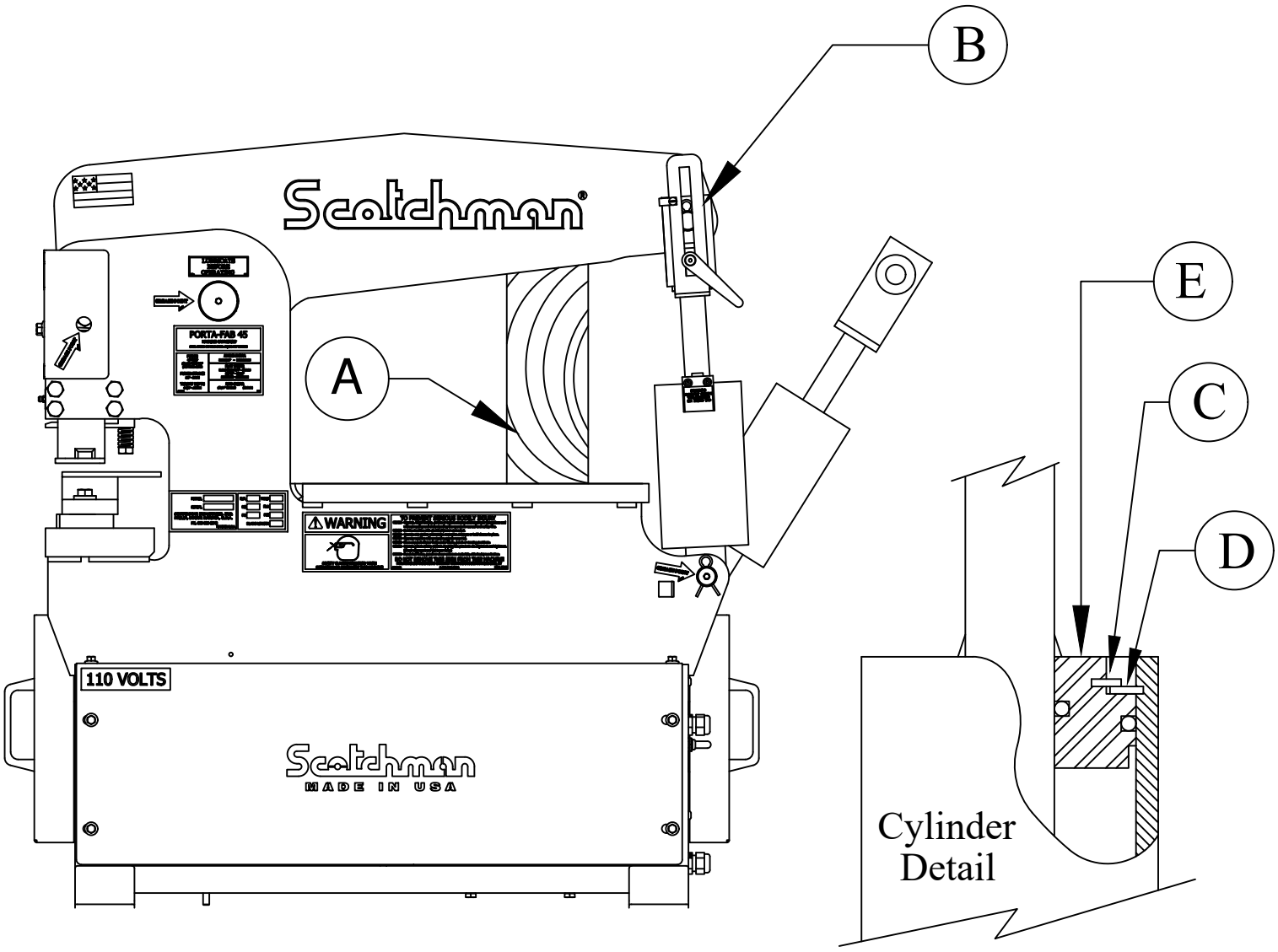
B
A
E
C
D
Scotchman
PORTA-PAB 45
WARNING
110 VOLTS
Scotchman
MADE IN USA
Cylinder
Detail

FIGURE 22

9.0 MACHINE PARTS LISTS

The Following Sections Contain The Ironworker And Optional Tooling Parts Lists And Drawings. For Your Own Convenience, Always Give Your Complete Serial Number When Ordering Parts.

9.1 PUNCH ASSEMBLY

ITEM	QTY	PART NUMBER	DESCRIPTION
A	1	012305	Punch Beam (Includes B, F, G, H, I, & J)
B	1	012304	Bushing
C	1	012331	Punch Pin S/N 2400PF0717 and up
C1	1	012321	Punch Pin S/N 2376PF07/17 & Prior
D	1	201410	M12 X 25MM HHCS S/N 2400PF0717 and up
D1	1	006018	Grease Bolt S/N 2376PF07/17 & Prior
E	3	243101	Grease Zerk
E1	1	212014	M12 Lock Washer
F	1	412311	Pressure Block
G	2	233315	M-5 RHMS
H	2	234008	M-5 Hex Nut
I	1	312361	Spring Clip
J	1	221005	M-6 x 12 SHCS
K	2	215014	M-12 Greer Nut
L	2	402290	Drag Link
M	1	400615	Punch Barrel (Includes H)
N	2	205425	M-12 HHCS
O	4	208014	M-12 Nut
P	4	203450	M12 X 130 HHCS S/N 2400PF0717 and up
P1	4	203455	M-12 x 140 HHCS S/N 2376PF07/17 & Prior
Q	1	401464	Punch Barrel Guide
Q1	1	012325	Punch Barrel Guide (Ser.#1038 & Prior)
R	1	000624	Punch Jam Nut
R1	1	000628	Jam Nut Wrench
S	1	401479	Stripper Clip
T	1	401490	Stripper
U	1	500040	3/4 x 1 Spring
V	1	201220	M-10 HHCS
W	1	401492	Stripper Plate
X	2	230005	M-6 x 12 FSHCS
Y	2	230107	M-8 FSHCS
Z	1	400726	Punch Plate
AA	2	205422	M-12 x 55 HHCS
BB	2	162005	Washer Reid
CC	1	401470	Die Holder (IncludesY & DD)
DD	1	219047	M-10 x 12 SS
EE	1	001472	Die Holder Spacer

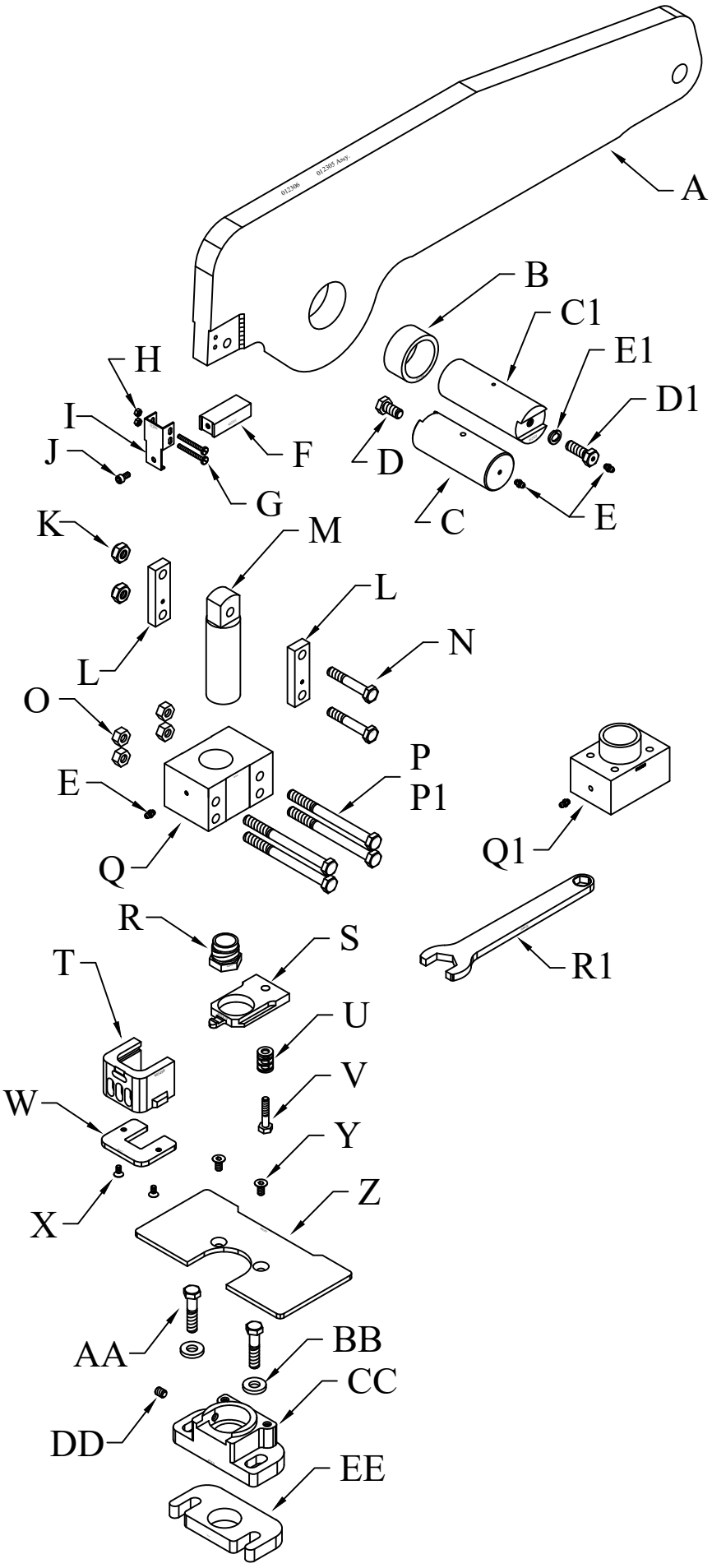
A
B
C1
E1
D1
H
I
J
F
D
G
C
E
K
M
L
L
N
O
P
P1
E
Q
Q1
R
S
R1
T
U
V
W
Y
X
Z
AA
BB
CC
DD
EE

FIGURE 23

9.2 STAND ASSEMBLY

ITEM	QTY	PART #	DESCRIPTION
A	2	012343	LEG ASS'Y 45 STAND
B	1	012349	SHELF
C	1	012440	PF BRACE BASE
D	10	201210	M10 X 20MM HHCS
E	10	215012	M10 GREER NUT
F	4	201410	M12 X 25MM HHCS
G	4	215014	M12 GREER NUT
H	1	012342	Complete Stand Assy.

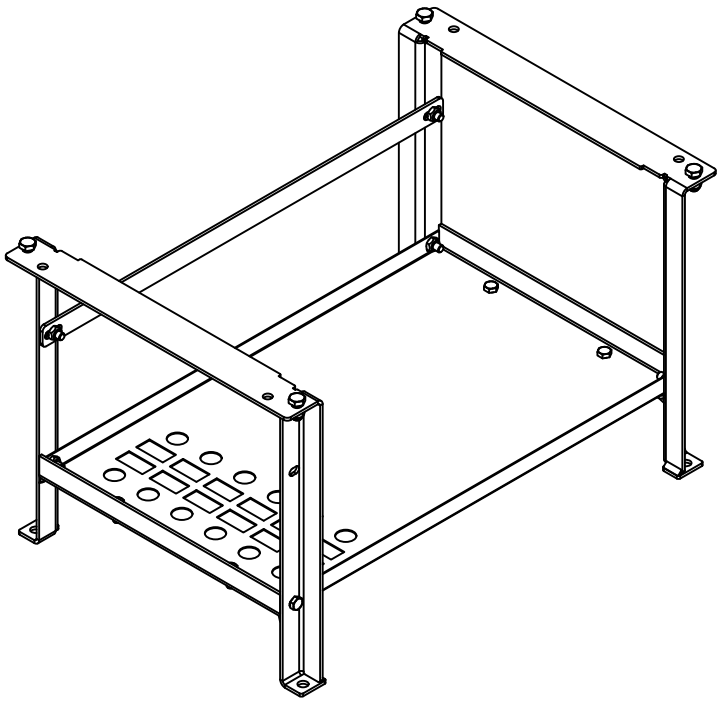

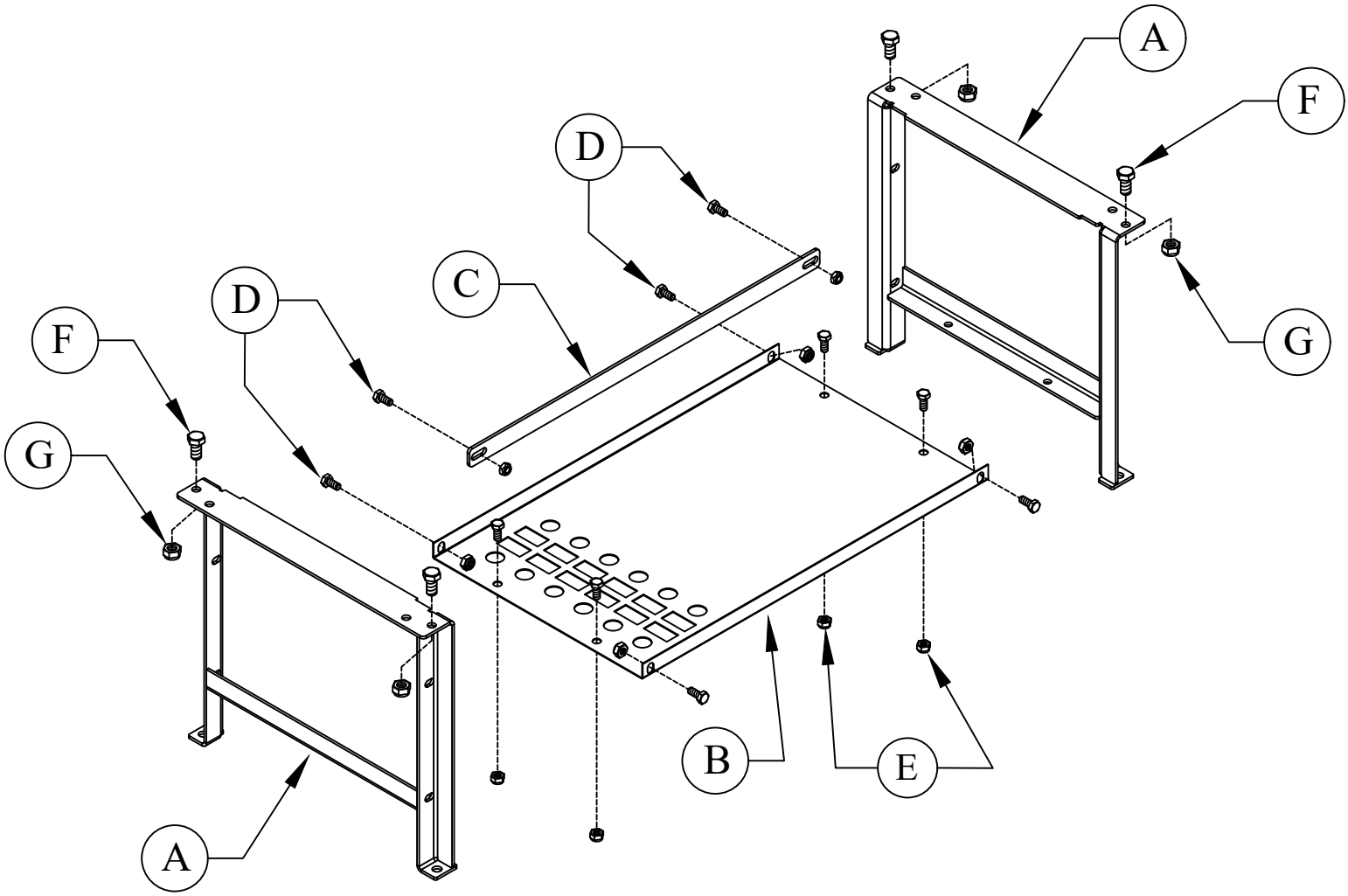

FIGURE 24

9.3 BASE ASSEMBLY

ITEM	QTY	PART #	DESCRIPTION
A	1	012390	PF Punch Guard
B	4	224205	M-10 x 16MM DIN-BN73 WLCS
C	1	012323	Punch Slug Chute
D	4	012371	Bucket Washer
E	2	012380	Punch Slug Receptacle
F	2	012383	PF Shroud Sales Assembly
G	12	224105	M-8 x 16MM DIN-BN73 WLCS
H	1	012336	On/Off Switch
H1	1	012378	Switch Assembly (Includes H & J)
I	1	012322	A.S. Slug Chute
J	1	012376	Boot On/Off Switch
K	6	000202	1/2" Liq. Type Cord Conn.
L	6	562502	1/2 Conduit Lock Nut
M	2	012320	Push In Grommet
N	1	000203	8439 Liq. Connector
O	1	000200	Nut for #000203
P	4	073206	M-6 Hex Nut
Q	1	003122	Danger - Voltage Sticker
R	1	012374	Electrical Box
S	3	220020	M-6 x 16 BHCS
S1	1	012338	Foot Switch Assembly
		The Below (T thru Z) is for 230V 1PH Models ONLY.	
T	1	012423	Transformer 50KVA
U	4	073407	M-5 x 6 Slot Head
V	1	011933	Fuse 1-1/2 Amp Primary
W	1	012395	Transformer Cover
X	1	012425	Transformer Bracket
Y	2	213007	M-6 Large Washer
Z	1	201130	M-6 x 30MM HHCS
		The Below is for230V & Canadian Models ONLY.	
A1	1	012424	Raw Panel
B1	1	012426	110V Contactor (CANADA)
	1	012428	230V 1PH Starter/Overload

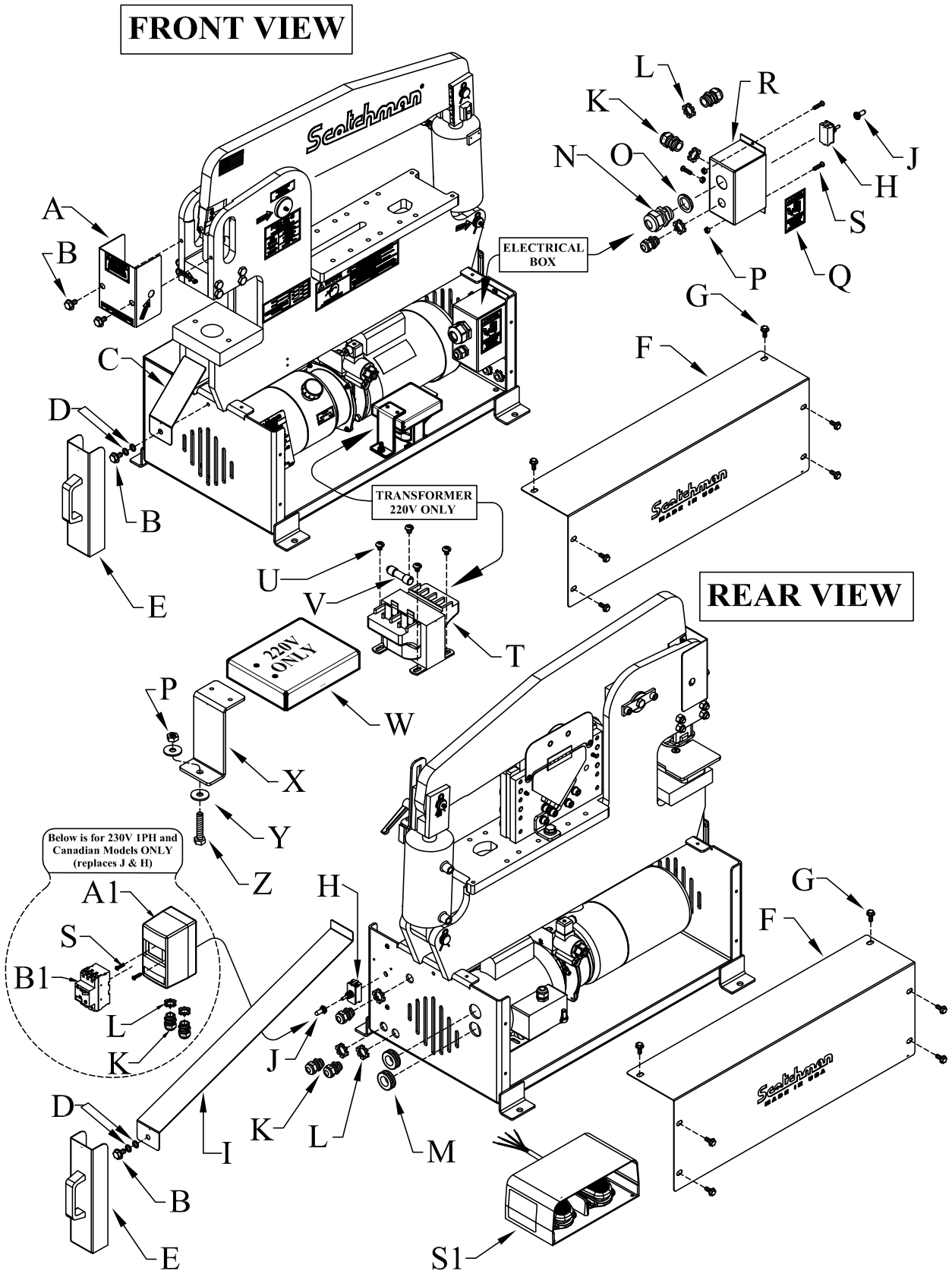
FRONT VIEW
REAR VIEW
ELECTRICAL BOX
TRANSFORMER 220V ONLY
• 220V ONLY
Below is for 230V 1PH and Canadian Models ONLY (replaces J & H)
A
B
C
D
E
F
G
H
I
J
K
L
M
N
O
P
Q
R
S
T
U
V
W
X
Y
Z
A1
B1
S1

FIGURE 25

9.4 POWER UNIT

PARTS LIST			
ITEM	QTY	PART #	DESCRIPTION
A	1	012435	T - Ass'y Pressure Hose
B	1	012328	45 Cylinder Ass'y
B1		012402	Porta-Fab 45 Cylinder Seal Kit
C	1	012434	Upper Cylinder Hose
D	1	012333	Lower Cylinder Hose
E	1	000202	1/2" liq. Type Cord Conn.
F	6	562502	1/2 Conduit Lock Nut
G	1	006545	DIN Conn (A) Grey
H	1	006540	DIN Conn (A) Black
I	1	012401	Valve 110V Parker (S/N 2484 & Prior)
J	5	215013	M-8 Greer Nut
K	5	114010	1/4 Flat Washer
L	5	201140	M-8 x 20 HHCS
M	1	019102	Reservoir Capacity Decal
N	1	003175	Caution Contamination
O	2	012447	Coil For Bucher Power Unit
P	1	012446	Directional Valve For Bucher Power Unit
Q	1	040012	AF Stop Buffer 48.6605 (S/N 2484 & Prior - not shown)
R	1	012445	6815-06-06 Elbow
S	1	012439	Elbow
T	1	003955	Diagnostic Nipple
U	1	003960	Dust Cap
V	1	001144	Pressure Gauge
W*	1	012422	PF Power Unit Retrofit Kit (S/N 2484 & Prior - not shown)
		012444	Power Unit - Bucher (S/N 2485 & Up)

S, T, U, & V - Parts Needed To Measure Hydraulic Pressure

W* - S/N 2484 & Prior used the Oildyne or Barnes Power Unit and both are obsolete. P/N 012422 Retrofit Kit has the new Power Unit with all the parts and instructions needed to mount it to the older machines.

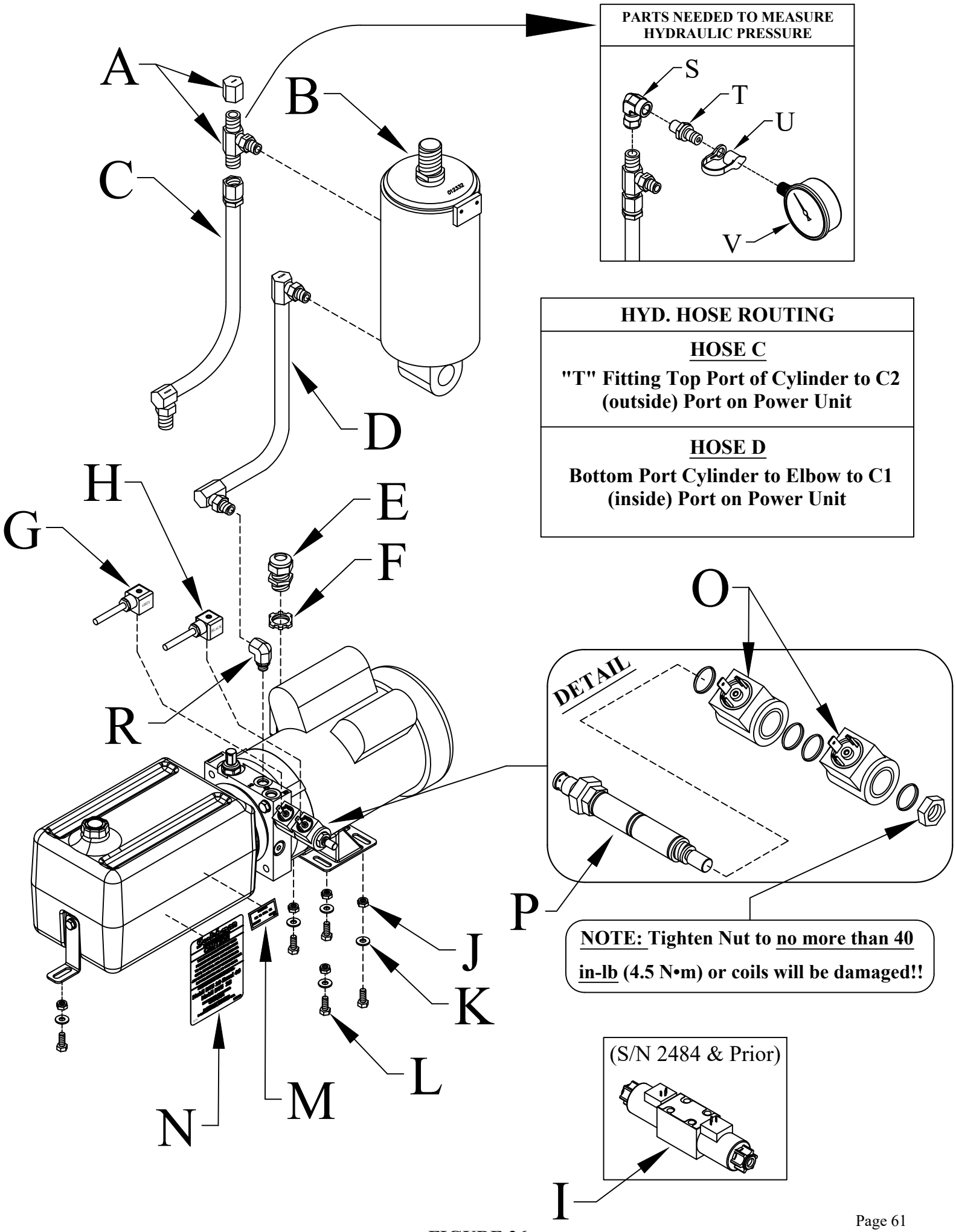

HYD. HOSE ROUTING

HOSE C

"T" Fitting Top Port of Cylinder to C2 (outside) Port on Power Unit

HOSE D

Bottom Port Cylinder to Elbow to C1 (inside) Port on Power Unit

NOTE: Tighten Nut to no more than 40 in-lb (4.5 N•m) or coils will be damaged!!

FIGURE 26

9.5 3 IN 1 COMBINATION TOOL

PARTS LIST			
ITEM	QTY	PART #	DESCRIPTION
1	1	003105	FINGERS BEYOND BAR GUARD
2	1	012353	REAR PLATE MULTI
3	2	012354	GUIDE MULTI TOOL
4	1	012355	UPPER BLADE MULTI TOOL
5	1	012357	FRONT MOUNT MULTI TOOL (BLACK)
6	1	012358	REAR MOUNT MULTI TOOL (BLACK)
7	1	012359	CAP MULTI TOOL
8	2	012366	THUMB SCREWS
9	4	012367	M12 X 50 DIN 6325H DOWEL
10	1	012370	FRONT PLATE ASS'Y MULTI TOOL
11	1	012393	FRONT GUARD PAINTED
12	1	012394	REAR GUARD PAINTED
13	1	016328	ANGLE SHEAR FRONT DECAL
14	8	073626	M10 X 20MM DIN912 SHCS
15	2	160045	3/4 X 3 DIE SPRING
16	2	201210	M10 X 20MM DIN933 HHCS
17	2	201215	M10 X 40MM DIN931 HHCS
18	8	201417	M12 X 45MM DIN931 HHCS
19	10	212012	M10 DIN127 LOCK WASHER
20	8	214012	M10 DIN125 REGULAR WASHER
21	2	210012	M10 DIN439 JAM NUT
21A	2	212012	M10 DIN127 LOCK WASHER
22	4	220016	M6 X 10MM DIN WN11252 BF
23	4	243101	M6 X 13.5 OAL GOLD ZERK
24	4	403412	LOWER A.S. BLADE NEW STY
25	1	012356	BAR BLADE MULTI TOOL

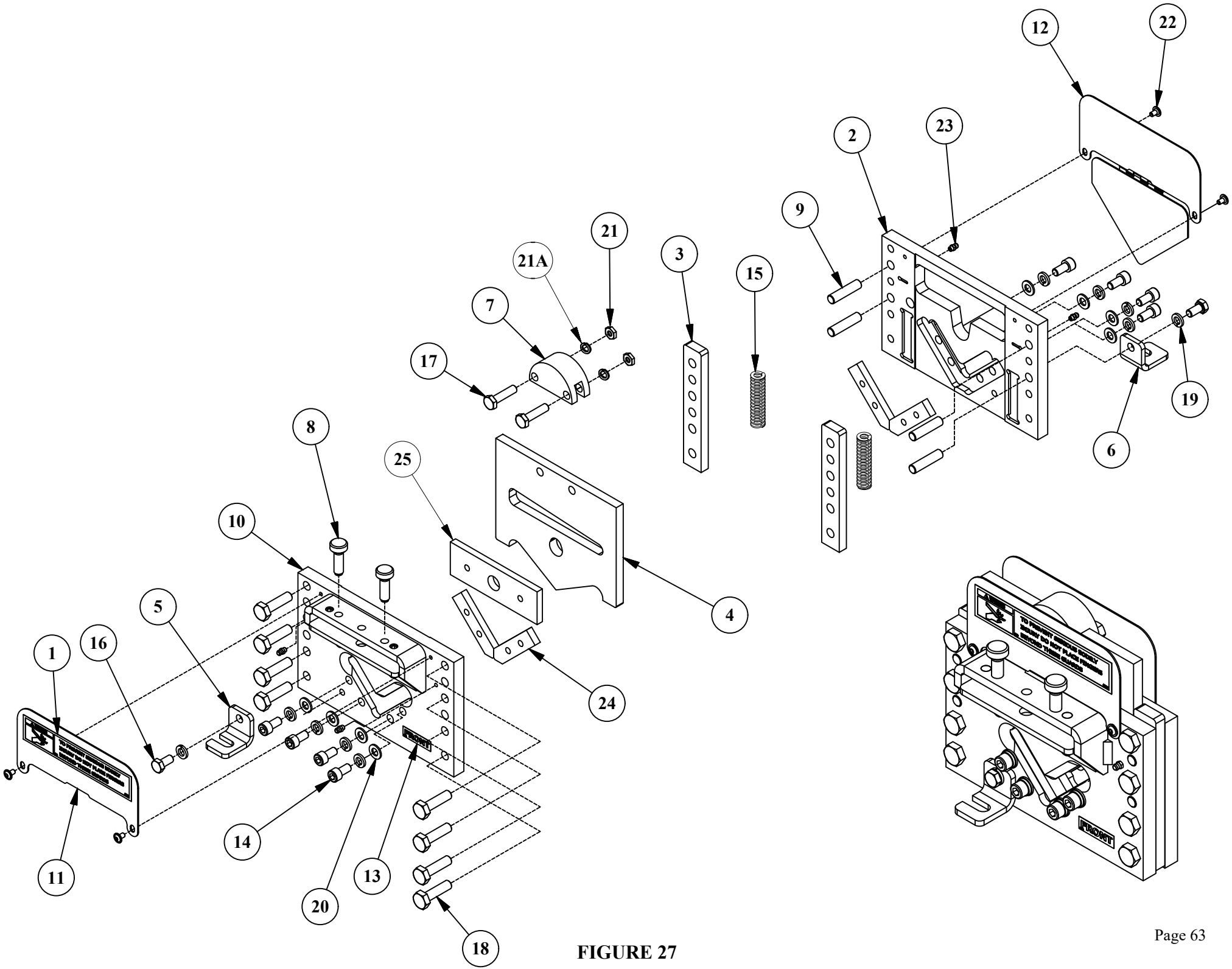

FIGURE 27

9.6 OPTIONAL MATERIAL STOP 30 INCH (76 CM)

ITEM	PART #	DESCRIPTION
A	677436	Stop Clamp
B	060315	Stop Shaft
C	060310	Shaft
D	073460	M-10 x 16 SHCS
E	210016	M-16 Jam Nut
F	076930	Complete Material Stop

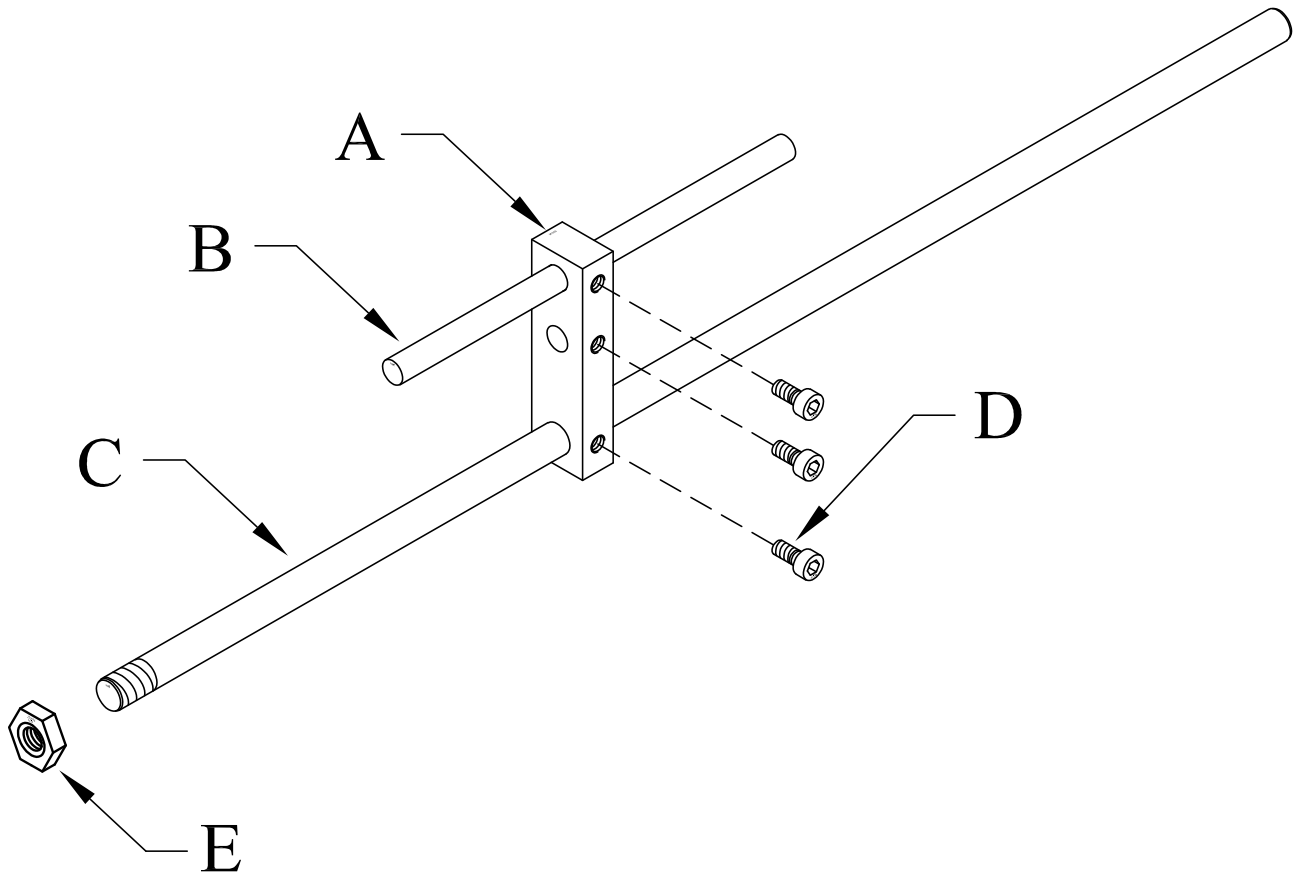

FIGURE 28

9.7 STROKE CONTROL

ITEM	QTY.	PART #	DESCRIPTION
A	1	412191	Upper Punch Pin - Metric
B	2	243101	M-6 x 13.5 OAL Gold Zerk
C	4	155010	1" External Snap Ring
D	1	012327	Cylinder Clevis
E	1	019305	Right Hand Rule
F	1	012410	45 Pointer S.C.
G	1	073407	M-5 x 6 Slot Head
H	1	214012	M-10 Regular Washer
I	1	080061	Stroke Adjustment Handle
J	1	562113	M.S. Limit Switch
K	2	073450	M-4 x 16MM SHCS
L	1	012328	45 CYLINDER ASS'Y (Includes D)
M	1	412241	Cylinder Pivot Pin
O	1	012420	45 Slider S.C.

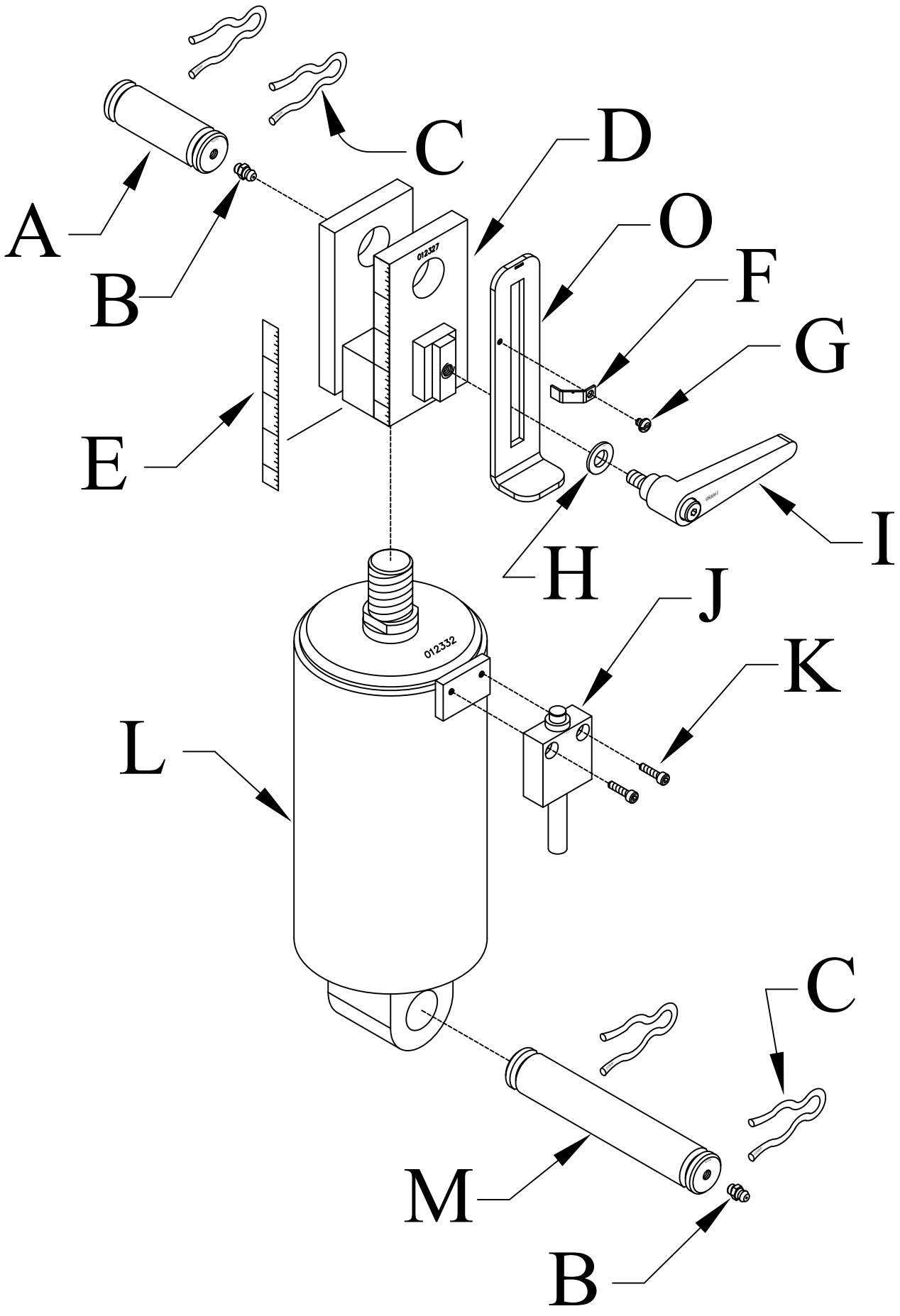

FIGURE 29

10.0 WIRING DIAGRAM

ITEM	QTY	PART #	DESCRIPTION
A	1	012378	Switch Assembly (Inc. A1 & A2)
A1	1	012336	On/Off Switch
A2	1	012376	Boot On/Off Switch
B	1	562113	M.S. Limit Switch
C	1	012338	Foot Switch Assembly
D	1	012412	Coil 110V Parker Porta
		012400	Coil 110V Barnes (Old Style) (Call factory before ordering D)
E	1	012426	110V Contactor (CANADA)
F	1	012428	230V 1PH Starter/Overload
G	1	012423	Transformer 50KVA
H	1	011933	Fuse 1-1/2 Amp Primary

10.1 WIRING DIAGRAMS

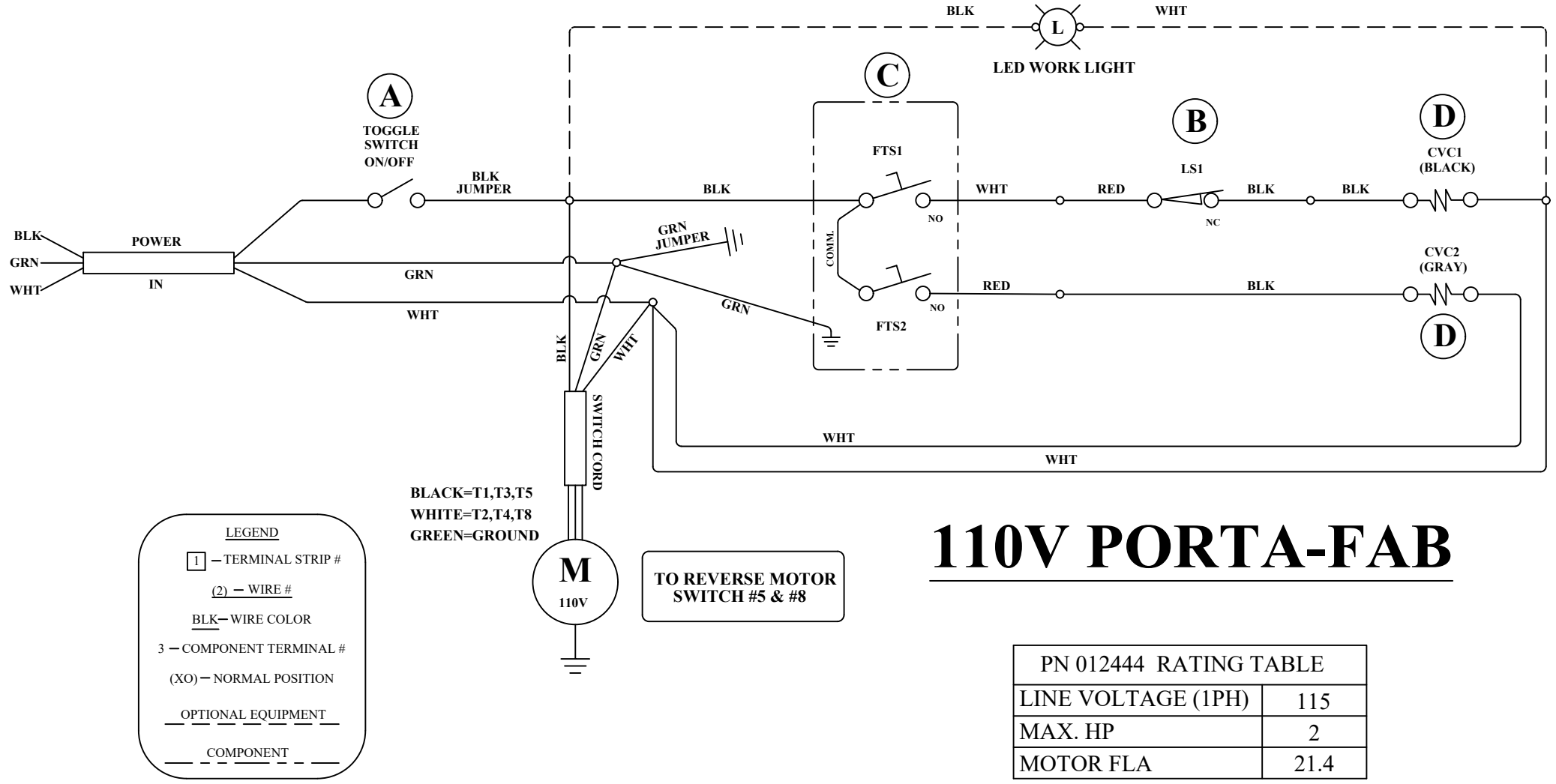

110V PORTA-FAB

PN 012444 RATING TABLE	
LINE VOLTAGE (1PH)	115
MAX. HP	2
MOTOR FLA	21.4

FIGURE 30

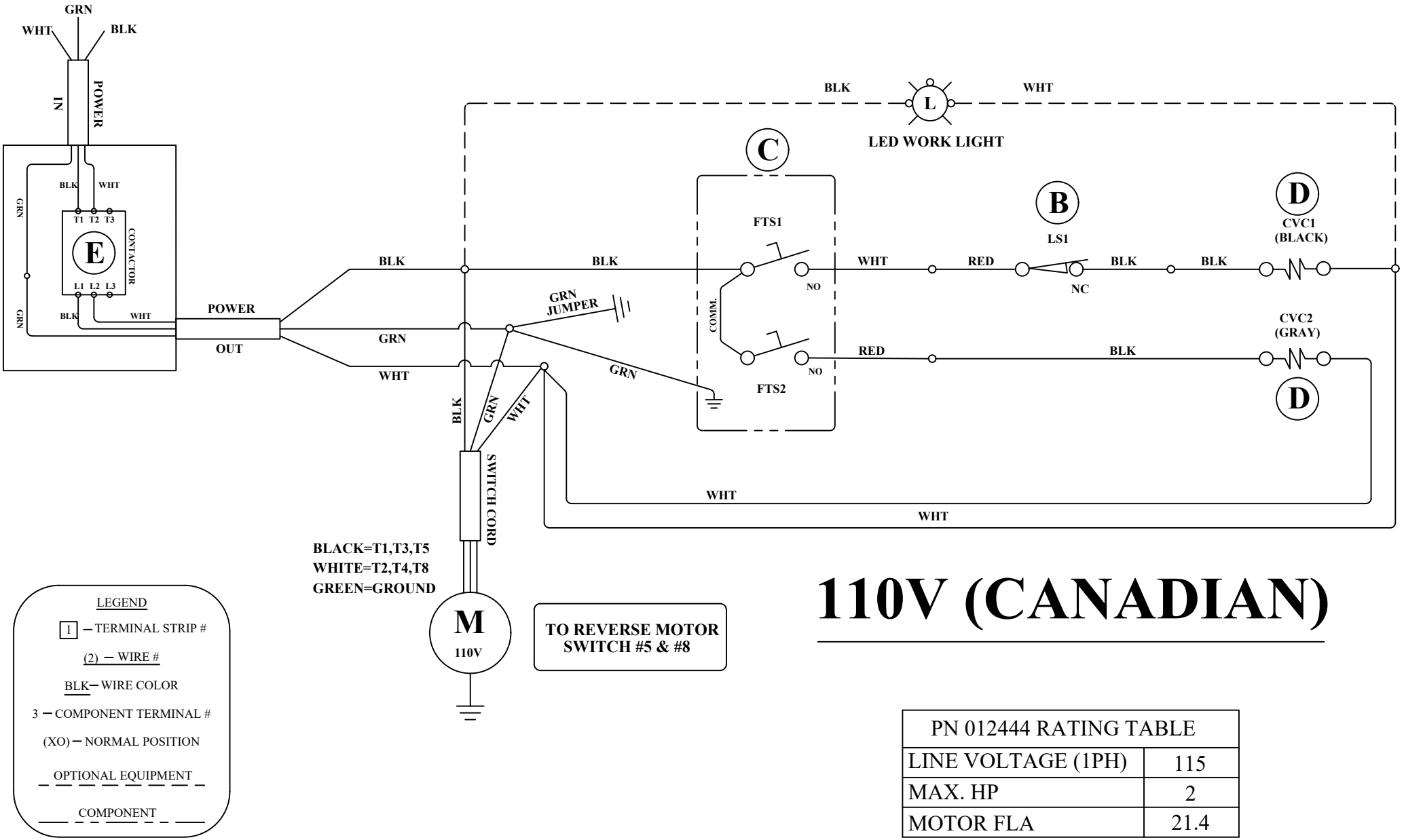

PN 012444 RATING TABLE	
LINE VOLTAGE (1PH)	115
MAX. HP	2
MOTOR FLA	21.4

FIGURE 31

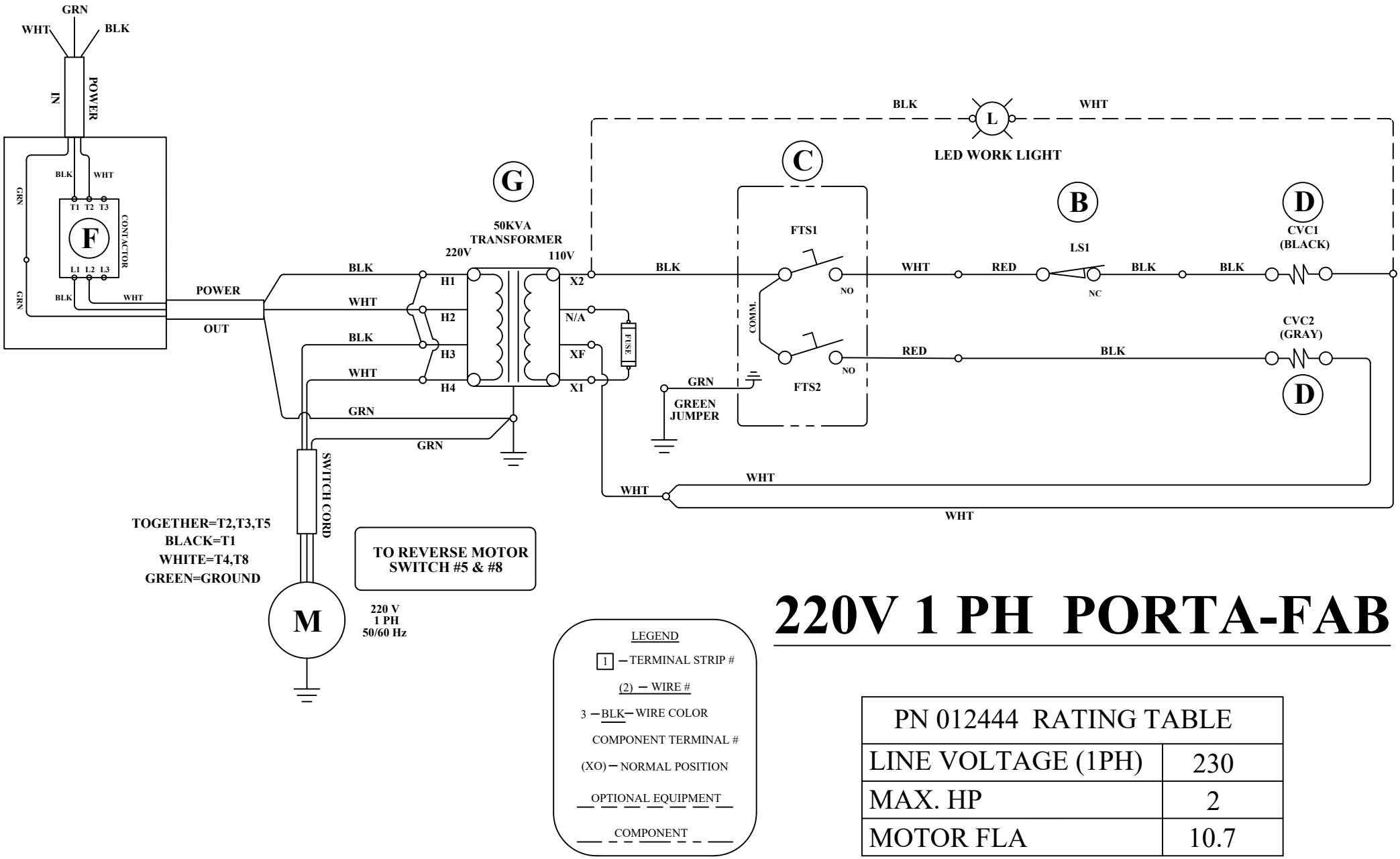

220V 1 PH PORTA-FAB

PN 012444 RATING TABLE	
LINE VOLTAGE (1PH)	230
MAX. HP	2
MOTOR FLA	10.7

FIGURE 32

10.2 ELECTRICAL BOX WIRING DIAGRAMS

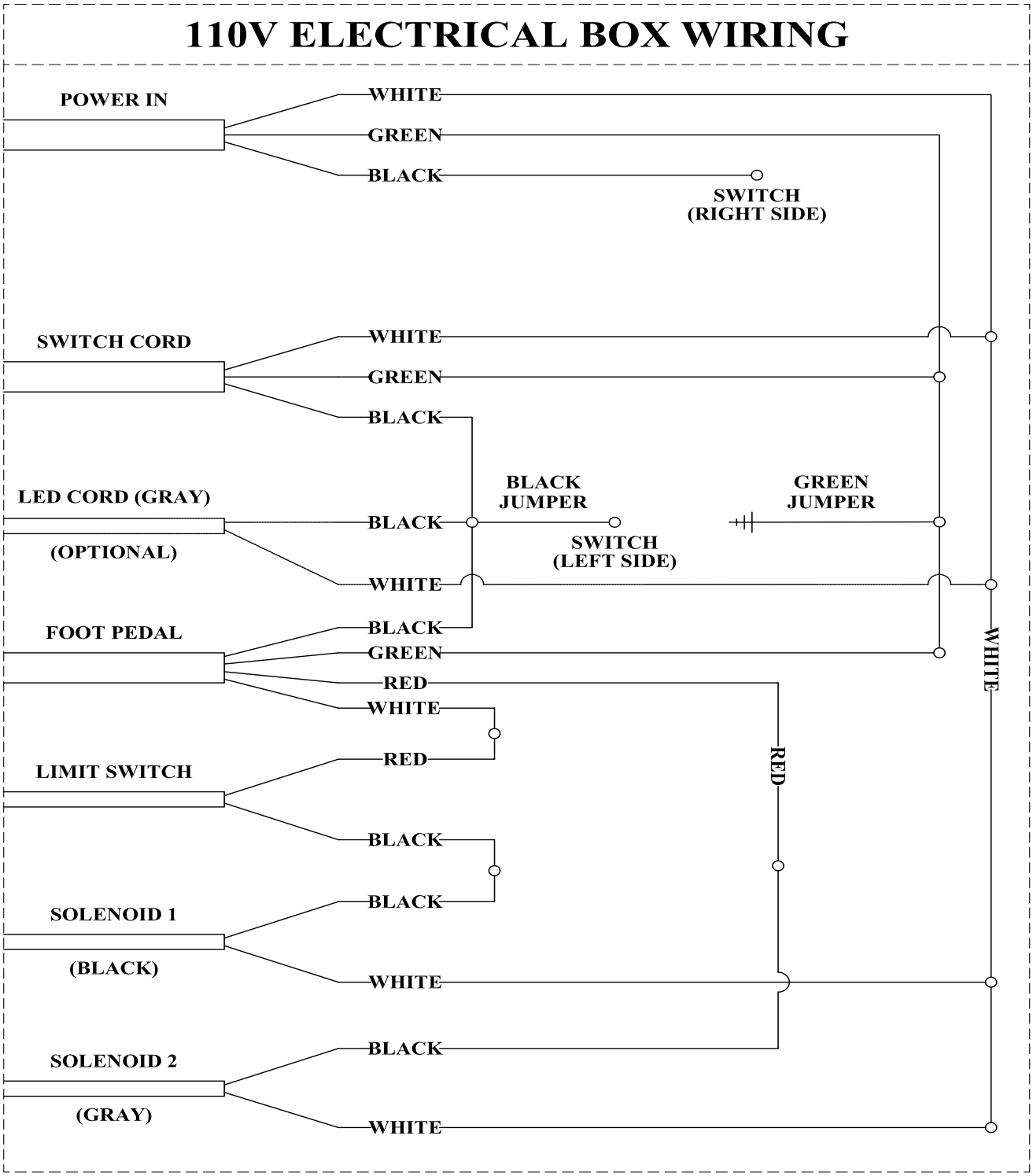

FIGURE 33

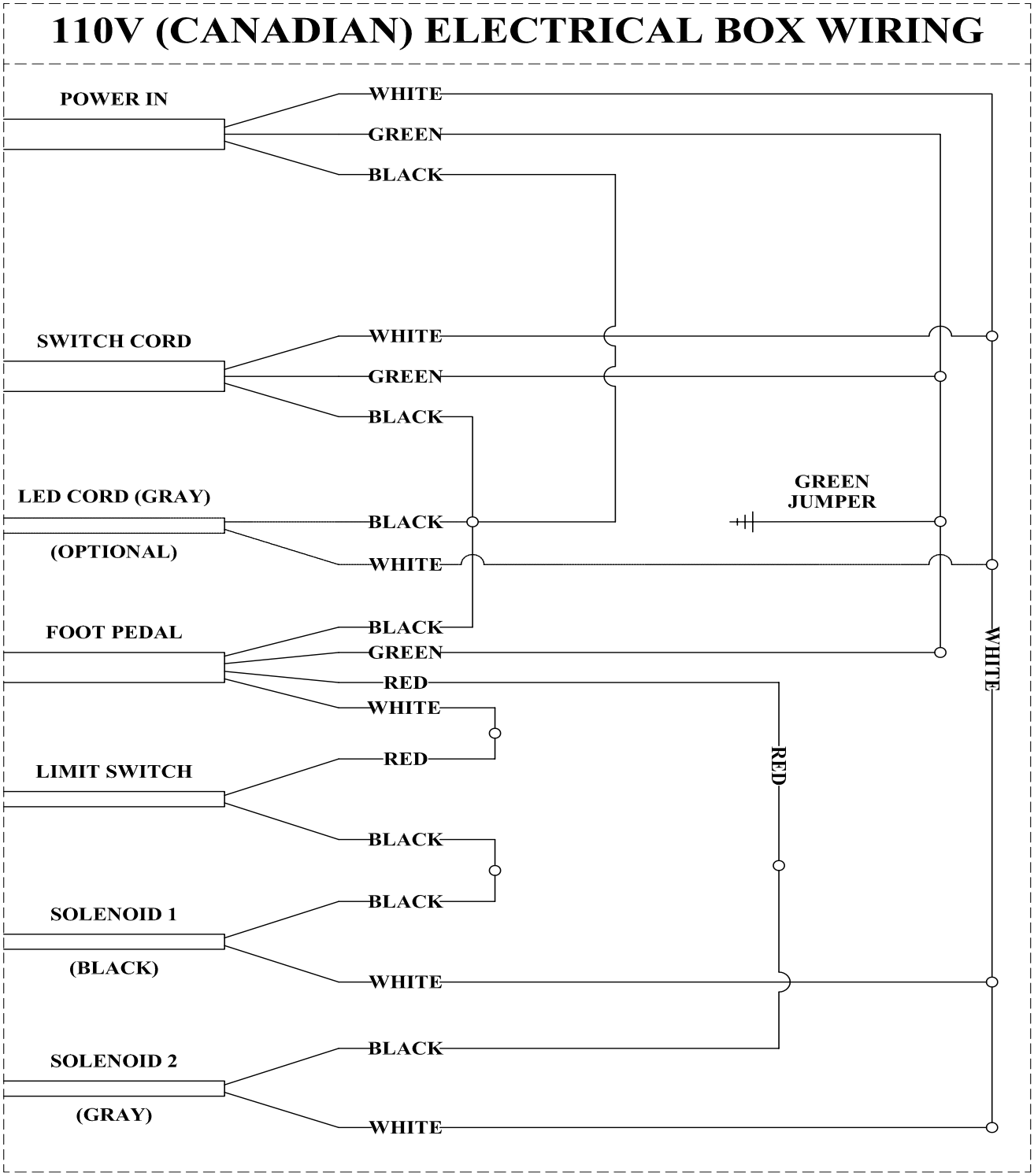
110V (CANADIAN) ELECTRICAL BOX WIRING
POWER IN
WHITE
GREEN
BLACK
SWITCH CORD
WHITE
GREEN
BLACK
LED CORD (GRAY)
(OPTIONAL)
BLACK
WHITE
GREEN JUMPER
FOOT PEDAL
BLACK
GREEN
RED
WHITE
LIMIT SWITCH
RED
BLACK
SOLENOID 1
(BLACK)
BLACK
WHITE
SOLENOID 2
(GRAY)
BLACK
WHITE
RED
WHITE

FIGURE 34

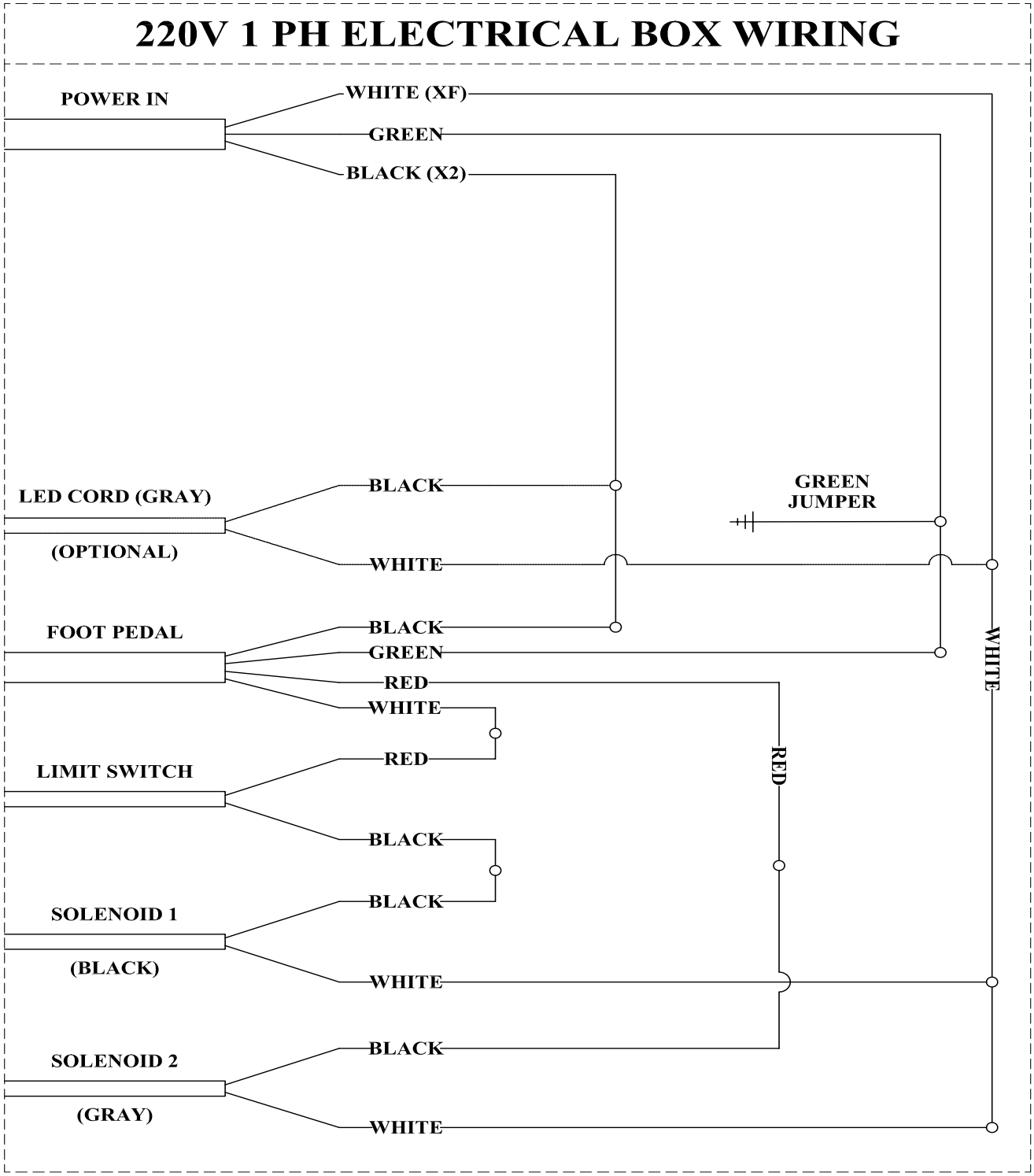
220V 1 PH ELECTRICAL BOX WIRING
POWER IN
WHITE (XF)
GREEN
BLACK (X2)
LED CORD (GRAY)
(OPTIONAL)
BLACK
WHITE
GREEN
JUMPER
FOOT PEDAL
BLACK
GREEN
RED
WHITE
WHITE
RED
RED
LIMIT SWITCH
BLACK
BLACK
SOLENOID 1
(BLACK)
WHITE
BLACK
SOLENOID 2
(GRAY)
WHITE

FIGURE 35

11.0 HYDRAULIC SCHEMATIC

1.	VANE PUMP
2.	2 H.P. AC MOTOR
3.	PRESSURE RELIEF
4.	DO3 4-WAY SOL. VALVE
5.	2 GAL (7.5L) RESERVOIR
6.	DOUBLE ACTING CYL.

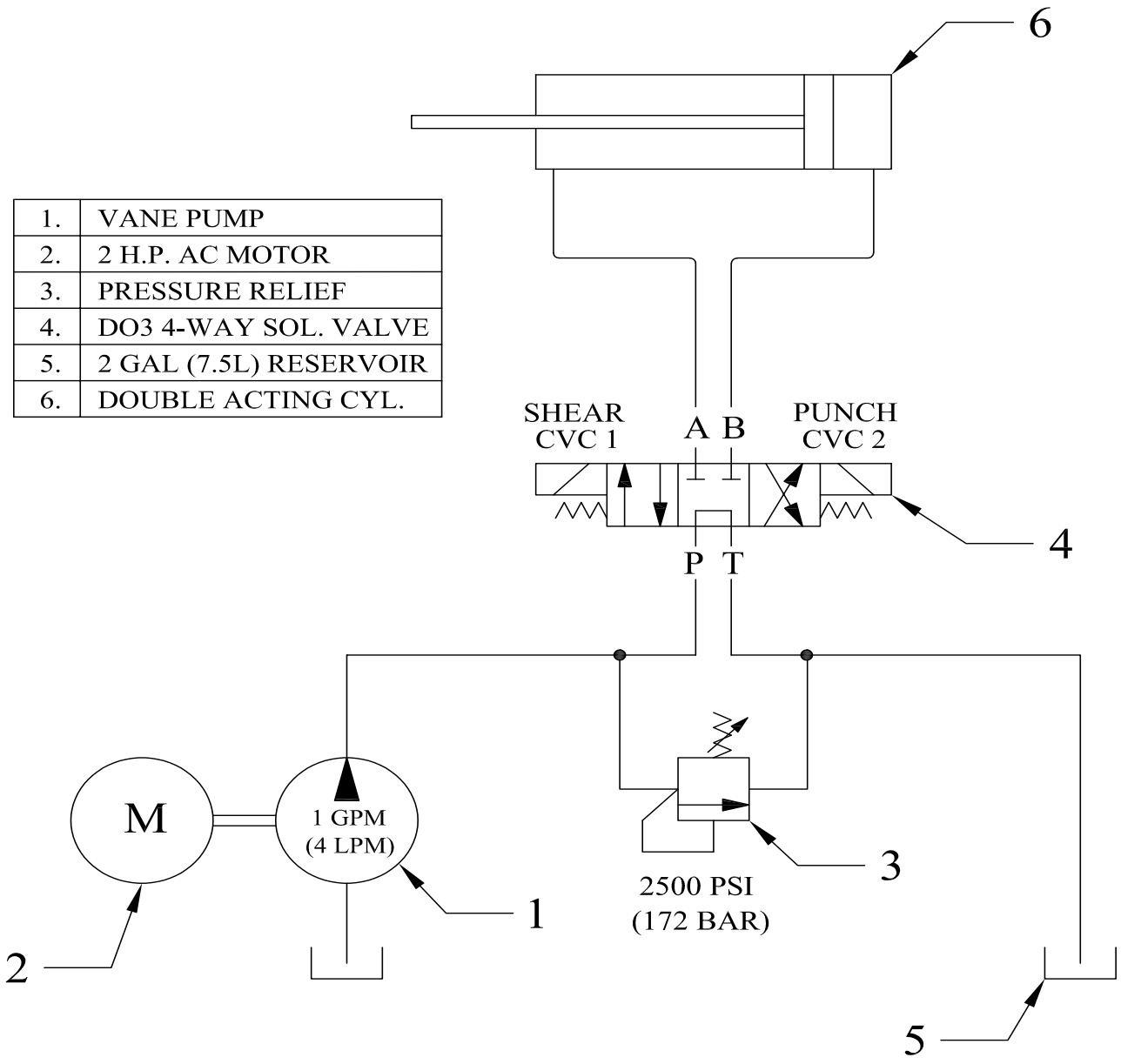

FIGURE 36